SUBMITTAL DATA SHEET

BLUERIDGE

BM09MCC	Cassette Heat Pump Air Handlers

Location: _____
Engineer: _____
Submitted to: _____
Submitted by: _____
Reference: _____

Approval: _____
Date: _____
Construction: _____
Unit #: _____
Drawing #: _____

Indoor unit code	453076222
Indoor unit model	BM09MCC
Ceritified	**UL**

INDOOR UNIT DATA		
Power supply		
Normal Operational Voltage	(V, Ph, Hz)	208/230, 1, 60
Voltage Range	(V)	187-253
Indoor fan motor		
Type		Cross-Flow
Model		ZKFP-46-8-1
Qty		1
Input	(W)	45.0
RLA	(A)	-
LRA	(A)	-
Winding Resistance	(Ω)	-
Capacitor	(uF)	-
Speed(Hi/Mi/Lo)	(r/min)	600/520/460

INDOOR UNIT DATA		
Air flow & Noise level		
Indoor air flow (Hi/Med/Lo)	(CFM)	352.94/305.88/270.59
Indoor noise level (Hi/Med/l	[dB(A)]	39.5/36/32.5
Dehumidification	(Pint/H)	---
Indoor unit		
Dimension (WxDxH)	(inch)	22.44x22.44x10.24
	(mm)	570x570x260
Packing(WxDxH)	(inch)	26.06x26.06x12.48
	(mm)	662x662x317
Net/Gross weight	(lbs.)	31.97/43
	(kg)	14.5/17.3
Liquid side/ Gas side	(inch)	1/4" / 3/8"
	(mm)	6.35/9.52
Application area	(sq.ft)	129.17～193.75
	(m2)	12～18
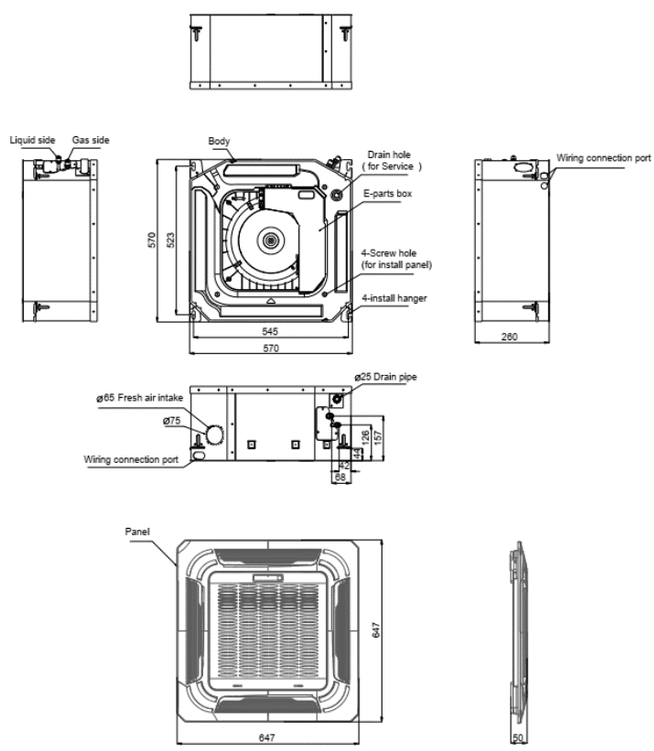
Indoor unit dimension