SUBMITTAL DATA SHEET

BMM16LW	New Console

Location: _____
Engineer: _____
Submitted to: _____
Submitted by: _____
Reference: _____

Approval: _____
Date: _____
Construction: _____
Unit #: _____
Drawing #: _____

Indoor unit code	453091302
Indoor unit model	BMM16LW
Ceritified	UL

INDOOR UNIT DATA		
Power supply		
Normal Operational Voltage	(V, Ph, Hz)	208-230V,1Ph,60Hz
Voltage Range	(V)	187-253
Indoor fan motor 1		
Type		Cross-Flow
Model		ZKFP-13-8-136
Qty		1
Input	(W)	/
Output	(W)	13
RLA	(A)	1.03
Speed(Hi/Mi/Lo)	(r/min)	1100/1000/900
Indoor fan motor 2		
Type		Cross-Flow
Model		ZKFP-13-8-104
Qty		1
Input	(W)	/
Output	(W)	13
RLA	(A)	
Speed(Hi/Mi/Lo)	(r/min)	1100/1000/900

INDOOR UNIT DATA		
Air flow & Noise level		
Indoor air flow (Hi/Med/Lo)	(CFM)	441.18/382.35/323.53
Indoor noise level (Hi/Med/Lo)	[dB(A)]	45/43.5/30.5
Dehumidification	(Pint/H)	---
Indoor unit		
Dimension (WxDxH)	(inch)	31.26x7.87x24.45
	(mm)	794x200x621
Packing(WxDxH)	(inch)	34.06x11.02x28.31
	(mm)	865x280x719
Net/Gross weight	(lbs.)	32.85/41.45
	(kg)	14.9/18.8
Liquid side/ Gas side	(inch)	1/4" / 1/2"
	(mm)	6.35/12.7
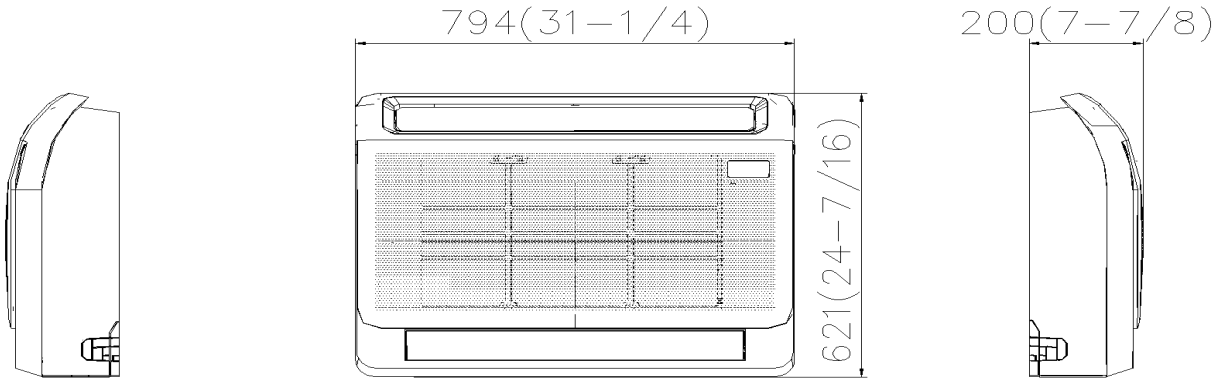
Indoor unit dimension