SUBMITTAL DATA SHEET

BMM6WM	Wall Mounted Heat Pump Air Handlers

Location: _____
Engineer: _____
Submitted to: _____
Submitted by: _____
Reference: _____

Approval: _____
Date: _____
Construction: _____
Unit #: _____
Drawing #: _____

Indoor unit code	453087899
Indoor unit model	BMM6WM
Ceritified	**UL**

INDOOR UNIT DATA		
Power supply		
Normal Operational Voltage	(V, Ph, Hz)	208/230, 1, 60
Voltage Range	(V)	187-253
Indoor fan motor		
Type		Cross-Flow
Model		ZKFP-13-8-4
Qty		1
Input	(W)	-
RLA	(A)	-
LRA	(A)	-
Winding Resistance	(Ω)	-
Capacitor	(uF)	-
Speed(Hi/Mi/Lo)	(r/min)	1100/810/690

INDOOR UNIT DATA		
Air flow & Noise level		
Indoor air flow (Hi/Med/Lo)	(CFM)	247.06/176.47/141.18
Indoor noise level (Hi/Med/	[dB(A)]	38.5/33/20.5
Dehumidification	(Pint/H)	---
Indoor unit		
Dimension (WxDxH)	(inch)	28.70x7.87x11.50
	(mm)	729x200x292
Packing(WxDxH)	(inch)	31.10x10.63x14.76
	(mm)	790x270x375
Net/Gross weight	(lbs.)	17.64/22.49
	(kg)	8.0/10.2
Liquid side/ Gas side	(inch)	1/4" / 3/8"
	(mm)	Φ6.35 / Φ9.52
Application area	(sq.ft)	86.11～129.17
	(m2)	8～12

Indoor unit dimension

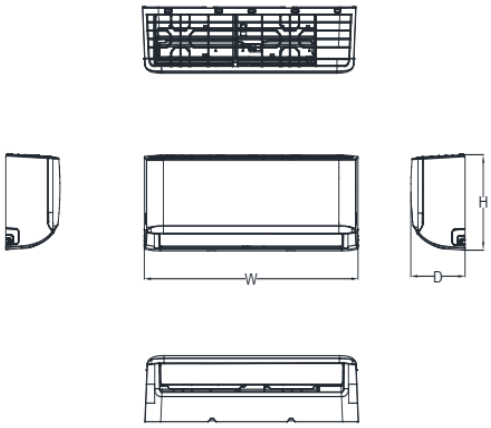

Capacity	Body Code	W(mm/inch)	D(mm/inch)	H(mm/inch)
6K~11K	A	729/28.7	200/7.87	292/11.5
8K~14K	B	802/31.57	200/7.87	295/11.61
12K~21K	C	971/38.23	228/8.98	321/12.64
18K~28K	D	1082/42.6	234/9.21	337/13.27
27K~36K	F	1259/49.57	283/11.14	362/14.25