R454b
Refrigerant

SUBMITTAL DATA SHEET

Air Handler Heat Pump System BNG2A18SCN-24ENA	
Location:	Approval:
Engineer:	Date:
Submitted to:	Construction:
Submitted by:	Unit #:
Reference:	Drawing #:

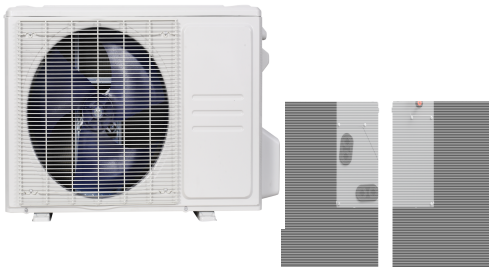

INDOOR SPECIFICATION		
Dimension (W×D×H)	inch	14-1/2 x 21 x 18
	mm	368 × 533 × 457
Package (W×D×H)	inch	17-1/2 x 25-3/8 x 20-5/8
	mm	445 × 645 × 525
Net/Gross Weight	lbs	42 / 50
	kg	19 / 22.5

OUTDOOR SPECIFICATION		
Compressor Type		ROTARY
Compressor Model		KSN140D58UFZ
Refrigerant		R454B
Refrigerant Oil Charge(mL)		440
Refrigerant Oil		VG74
Outdoor Air Flow (Max) (CFM)		1,451
Outdoor Noise Level (dBA)		56
Dimension (W×D×H)	inch	31-3/4 x 13 x 21-3/4
	mm	805 ×330 ×554
Package (W×D×H)	inch	36 x 14-9/16 x 24-3/16
	mm	915×370×615
Net/Gross Weight	lbs	77 / 84
	kg	35 / 38

EFFICIENCY			
Cooling		Heating	
SEER2	16	HSPF2-4	8.6
EER2	10.2	COP	3.15

PERFORMANCE of Cooling	
Cooling (Btu/hr)	
Rated Capacity	18,000
Min/Max Capacity	6,500~21,600
Moisture Removal(L/h)	2.35
Standard Operating Range(℉/℃)	-13~122 (-25~50)
Rated Cooling Conditions:	Indoor: 80℉ DB/67℉ WB Outdoor: 95℉ DB/75℉ WB

PERFORMANCE of Heating	
Heating (Btu/hr)	
1. @ 47℉ Rated	19,000
1. @ 47℉ Min/Max Capacity	6,800~22,000
2. @ 17℉ Rated	12,200
3. @ 5℉ Rated: Capacity / COP	10,800/1.8
3. @ 5℉ Max: Capacity	10,800
Standard Operating Range(℉/℃)	-13~75 (-25~24)
1. Rated Heating Conditions:	Indoor: 70℉ DB/60℉ WB Outdoor: 47℉ DB/43℉ WB
2. Rated Heating Conditions:	Indoor: 70℉ DB/60℉ WB Outdoor: 17℉ DB/15℉ WB
3. Heating Conditions, Compressor Operating at Max. Frequency	Indoor: 70℉ DB/60℉ WB Outdoor: 5℉ DB/5℉ WB

ELECTRICAL	
Indoor Power Supply	24V,60Hz,1Ph
Indoor MCA 115V/(208/230V)	/
Indoor MOP	/
Outdoor Power Supply	208/230,60Hz,1Ph
Outdoor MCA	16.0
Outdoor MOP	20.0
Communication Wiring	AWG 20/2
Compressor RLA	10
Outdoor Fan Motor RLA	0.8
Outdoor Fan Motor W	/
Indoor Fan Motor RLA	/
Indoor Fan Motor W	/
System Power Input @ Cooling (W)	1,765 (310 ~ 2,000)
System Power Input @ Heating (W)	1,768 (600 ~1,740)
MCA: Min. circuit amps (A)	**MOCP: Max. over current protection (A)**
RLA: Rated load amps (A)	**W: Fan motor rated output (W)**

PIPING	
Throttle type(Indoor)	EXV
Throttle type(Outdoor)	EXV
Liquid Size	3/8" (9.52mm)
Gas Size	3/4" (19mm)
Max. Piping Length(ft/m)	98 (30)
Max. Height Difference(ft/m)	66 (20)
Max. Pre-charged Length(ft/m)	25 (7.5)
Refrigerant Pre-charged Amount	51 (1.45)
ditional Charge of Refrigerant((oz/ft)/(g/r	0.7 (65)
Connection Method	Flared

Indoor Unit Dimension

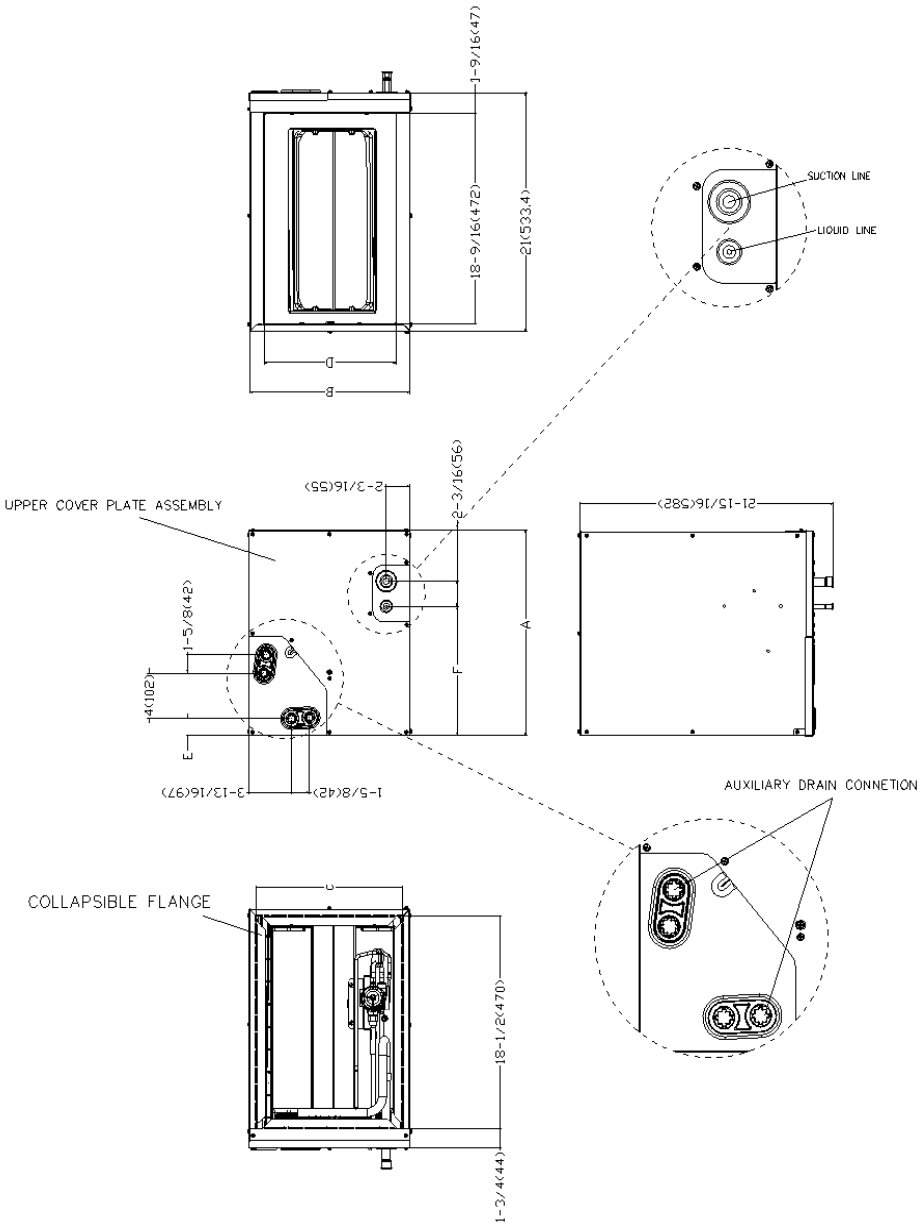

Dimensions \ Model(Btu/h)		24-A		36-A		36-B	
		inch	mm	inch	mm	inch	mm
A	Model Height	18	457	23-5/16	592	23-1/2	599
B	Model Width	14-1/2	368	14-1/2	368	17-1/2	445
C	Supply Air Opening Width	13-1/4	336	13-1/4	336	16-3/16	411
D	Return Air Opening Width	11-15/16	303	11-15/16	303	14-15/16	380
E	Condensate Drains Height	1-7/16	38	1-7/16	38	1-7/16	38
F	Liquid Line Height	11-3/8	290	17-15/16	455	16-3/8	417

Dimensions \ Model(Btu/h)		24-B		36-C			
		inch	mm	inch	mm		
A	Model Height	18	457	24	611		
B	Model Width	17-1/2	445	21	534		
C	Supply Air Opening Width	16-3/16	411	19-3/4	502		
D	Return Air Opening Width	14-15/16	380	18-7/16	468		
E	Condensate Drains Height	1-7/16	38	2-3/16	55		
F	Liquid Line Height	11-3/8	290	17-1/2	445		

Outdoor Unit Dimension

Unit:inch(mm)

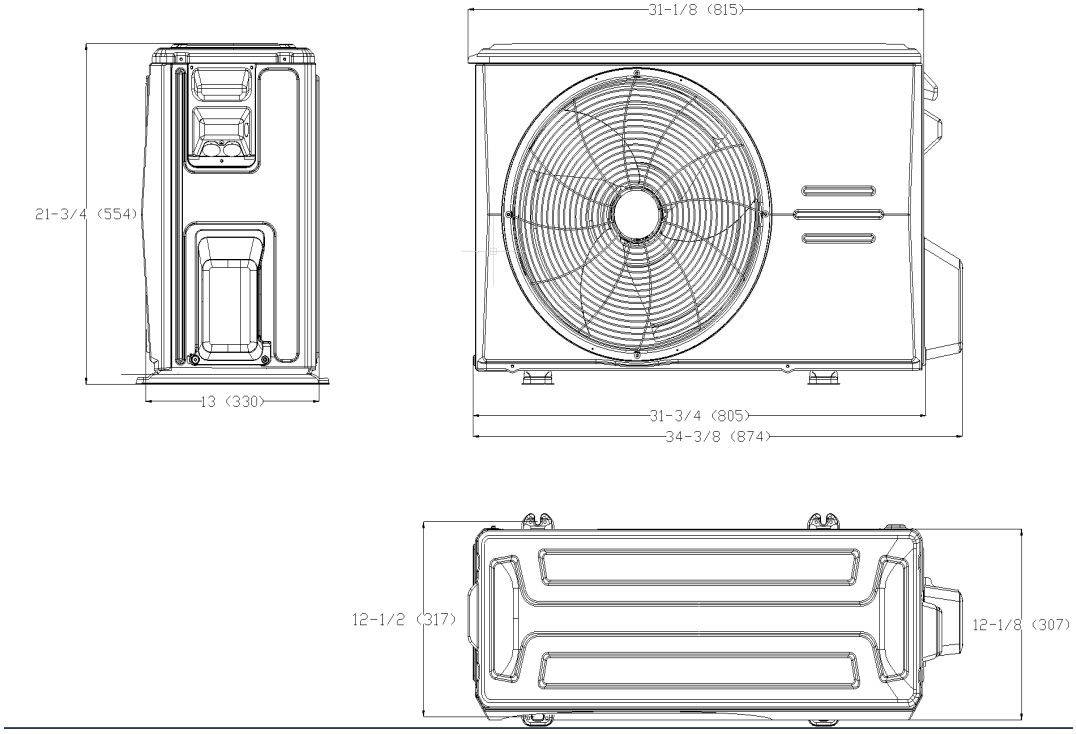

Installation Instruction For Outdoor Unit

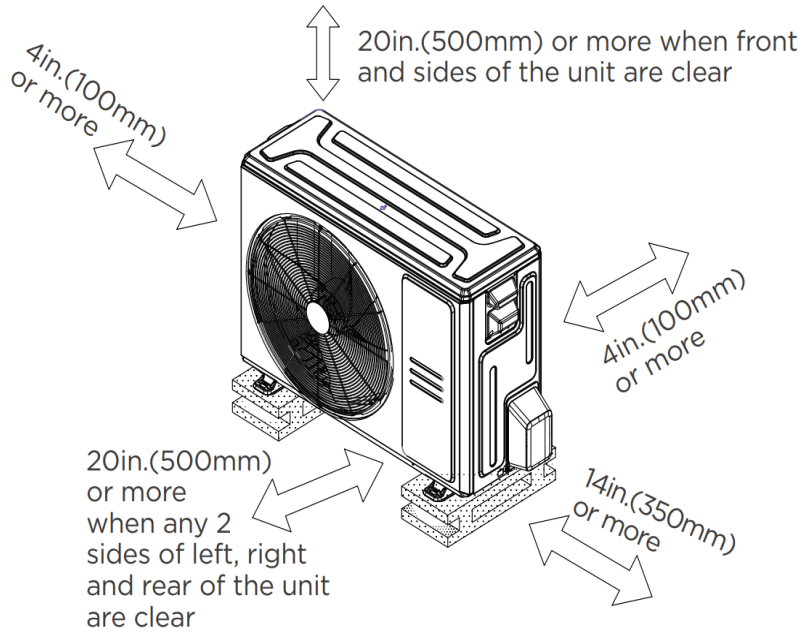

Features

- Multi-position installation: horizontal(left or right), vertical(up or down)
- Aluminum Coil
- R454B refrigerant sensor
- Easy Maintenance
- Multiple control options available:
  - Two way communication wired controller with built-in WiFi:120N(X6W)
  - Third-Party 24V Thermostat