SUBMITTAL DATA SHEET

Air Handler Heat Pump System BNG3A48UCN-60ENC	
Location:	Approval:
Engineer:	Date:
Submitted to:	Construction:
Submitted by:	Unit #:
Reference:	Drawing #:

INDOOR SPECIFICATION		
Dimension (W×D×H)	inch	21-5/8 x 21-1/2 x 27-3/4
	mm	549 x 546 x 706
Package (W×D×H)	inch	31-1/8 x 25 x 25-5/8
	mm	790 x 635 x 650
Net/Gross Weight	lbs	97 / 115
	kg	43.9 / 52.2

OUTDOOR SPECIFICATION		
Compressor Type		ROTARY
Compressor Model		MTH550UKPC8FU
Refrigerant		R454B
Refrigerant Oil Charge(mL)		1800
Refrigerant Oil		HAF68D1C
Outdoor Air Flow (Max) (CFM)		3037.1
Outdoor Noise Level (dBA)		65
Dimension (W×D×H)	inch	38-9/16 x 16-3/8 x 38-3/8
	mm	980 × 415 × 975
Package (W×D×H)	inch	45-1/16 x 19-11/16 x 42-1/2
	mm	1145 × 500 × 1080
Net/Gross Weight	lbs	201 / 232
	kg	91.2 / 105.4

EFFICIENCY			
Cooling		Heating	
SEER2	15.2	HSPF2-4	8.8
EER2	10.0	COP	3.12

PERFORMANCE of Cooling	
Cooling (Btu/hr)	
Rated Capacity	45000
Min/Max Capacity	16000-48000
Moisture Removal(L/h)	6.5
Standard Operating Range(℉/℃)	-22~122(-30～50)
Rated Cooling Conditions:	Indoor: 80℉ DB/67℉ WB Outdoor: 95℉ DB/75℉ WB

PERFORMANCE of Heating	
Heating (Btu/hr)	
1. @ 47℉ Rated	48000
2. @ 47℉ Min/Max Capacity	16000-50000
3. @ 17℉ Rated	34400
4. @ 5℉ Rated: Capacity / COP	42000/1.85
5. @ 5℉ Max: Capacity	42000
Standard Operating Range(℉/℃)	-22~75(-30～24)
1. Rated Heating Conditions:	Indoor: 70℉ DB/60℉ WB Outdoor: 47℉ DB/43℉ WB
2. Rated Heating Conditions:	Indoor: 70℉ DB/60℉ WB Outdoor: 17℉ DB/15℉ WB
3. Heating Conditions, Compressor Operating at Max. Frequency	Indoor: 70℉ DB/60℉ WB Outdoor: 5℉ DB/5℉ WB

ELECTRICAL	
Indoor Power Supply	24V,60Hz,1Ph
Indoor MCA 115V/(208/230V)	/
Indoor MOP	/
Outdoor Power Supply	208/230,60Hz,1Ph
Outdoor MCA	38
Outdoor MOP	40
Communication Wiring	AWG 20-2
Compressor RLA	28
Outdoor Fan Motor RLA	2
Outdoor Fan Motor W	/
Indoor Fan Motor RLA	/
Indoor Fan Motor W	/
System Power Input @ Cooling (W)	4500(1400-5080)
System Power Input @ Heating (W)	4500(1200-5300)
MCA: Min. circuit amps (A)	**MOCP: Max. over current protection (A)**
RLA: Rated load amps (A)	**W: Fan motor rated output (W)**

PIPING	
Throttle type(Indoor)	EXV
Throttle type(Outdoor)	EXV
Liquid Size	9.52mm(3/8in)
Gas Size	19mm(3/4in)
Max. Piping Length(ft/m)	246(75)
Max. Height Difference(ft/m)	98.4(30)
Max. Pre-charged Length(ft)	25
Refrigerant Pre-charged Amount	134.04(3.8)
ditional Charge of Refrigerant((oz/ft)/(g/n	0.7(65)
Connection Method	Flared

Indoor Unit Dimension

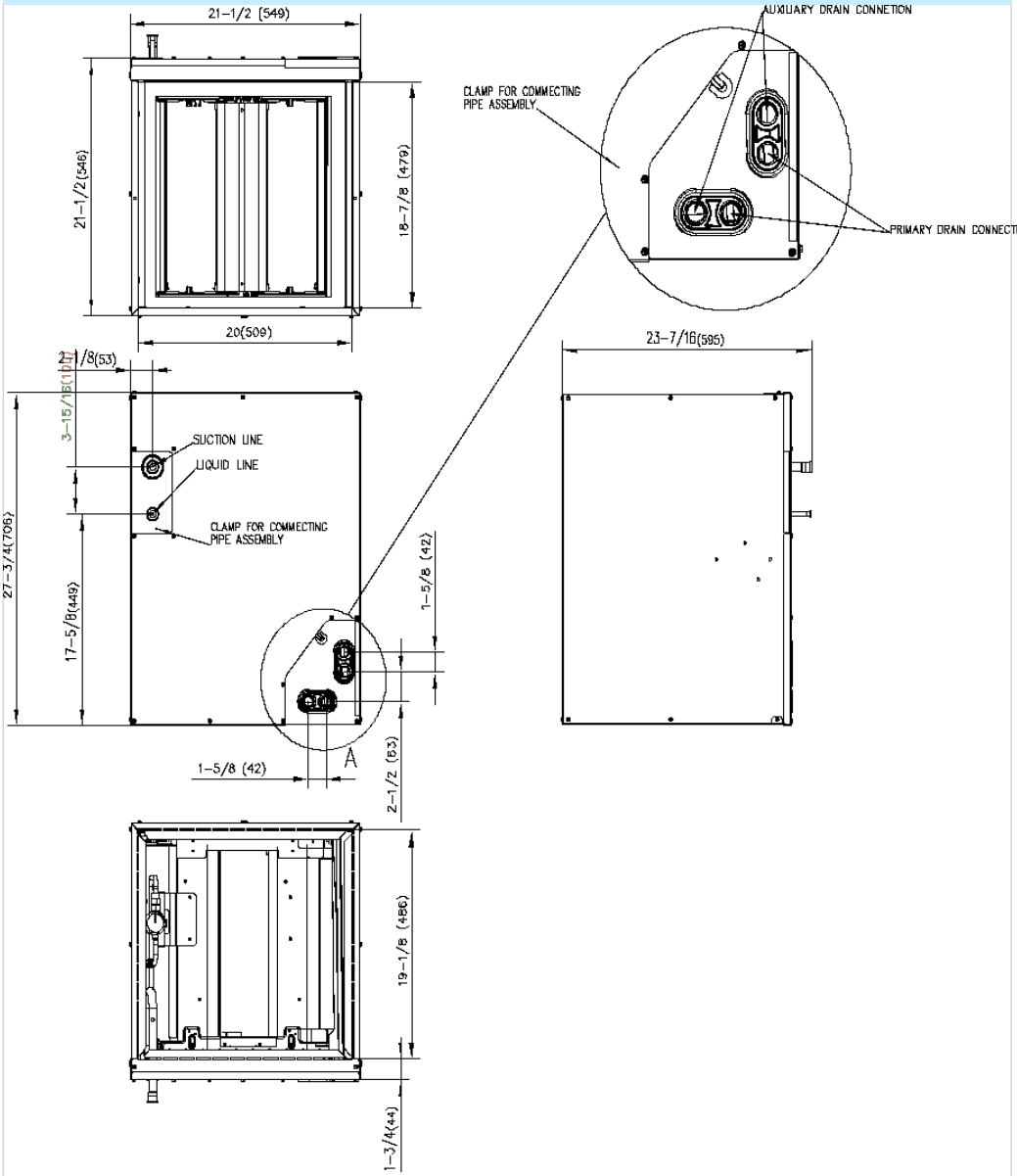

Outdoor Unit Dimension

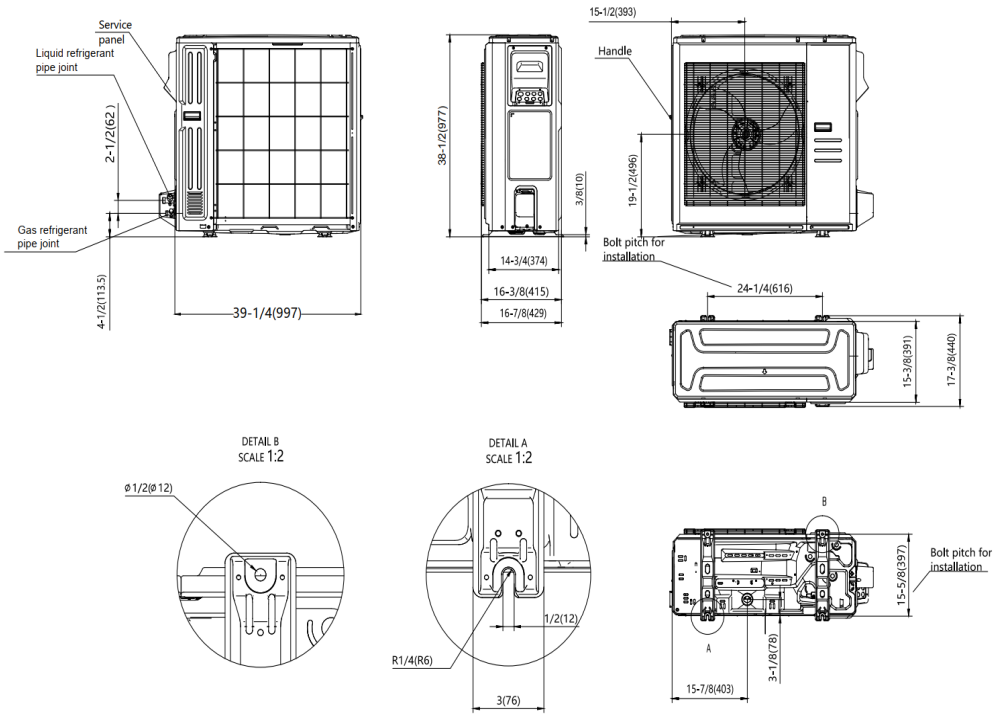

Installation Instruction For Outdoor Unit

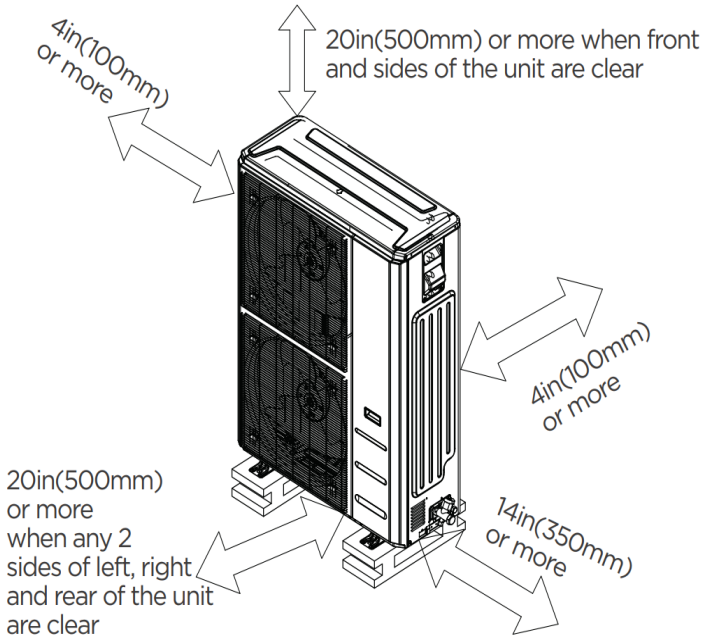

Features

- Multi-position installation: horizontal(left or right), vertical(up or down)
- Aluminum Coil
- R454B refrigerant sensor
- Easy Maintenance
- Multiple control options available:
  - Two way communication wired controller with built-in WiFi:120N(X6W)
  - Third-Party 24V Thermostat