SUBMITTAL DATA SHEET

Air Handler Heat Pump System BNG3DH30	
Location:	Approval:
Engineer:	Date:
Submitted to:	Construction:
Submitted by:	Unit #:
Reference:	Drawing #:

INDOOR SPECIFICATION		
ESP(in.W.G)		0-0.8
Indoor Air Flow (Turbo/H/M/L/Si) (CFM)		988.8 / 894.7 / 806.4 / 712.2 / N\A
Indoor Noise Level (Turbo/H/M/L/Si) (dBA)		47.0/46.0/43.0/27.5/N\A
Dimension (W×D×H)	inch	21.02 x 21.02 x 49.02
	mm	534.0×534.0×1245.0
Package (W×D×H)	inch	26.57 x 24.41 x 52.56
	mm	675×620×1335
Net/Gross Weight	lbs	128.97/153.44
	kg	58.5/69.6

OUTDOOR SPECIFICATION		
Compressor Type		ROTARY
Compressor Model		MTH356UKRC8FQL
Refrigerant		R454B
Refrigerant Oil Charge(mL)		1300
Refrigerant Oil		HAF68D1A
Outdoor Air Flow (Max) (CFM)		3001.8
Outdoor Noise Level (dBA)		60.5
Dimension (W×D×H)	inch	37.24 x 16.14 x 31.89
	mm	946.0×410.0×810.0
Package (W×D×H)	inch	42.91 x 19.68 x 34.84
	mm	1090×500×885
Net/Gross Weight	lbs	164.02/174.60
	kg	74.4/79.2

EFFICIENCY			
Cooling		Heating	
SEER2	16.8	HSPF2-4	10.0
EER2	11.7	COP	3.65

PERFORMANCE of Cooling	
Cooling (Btu/hr)	
Rated Capacity	30000
Min/Max Capacity	12800~39000
Moisture Removal(L/h)	2.77
Standard Operating Range(℉/℃)	-22~122(-30～50)
Rated Cooling Conditions:	Indoor: 80℉ DB/67℉ WB
	Outdoor: 95℉ DB/75℉ WB

PERFORMANCE of Heating	
Heating (Btu/hr)	
1. @ 47℉ Rated	34000
2. @ 47℉ Min/Max Capacity	10300~38500
3. @ 17℉ Rated	23800
4. @ 5℉ Rated: Capacity / COP	32600/1.96
5. @ 5℉ Max: Capacity	32600
Standard Operating Range(℉/℃)	-22~75(-30～24)
1. Rated Heating Conditions:	Indoor: 70℉ DB/60℉ WB
	Outdoor: 47℉ DB/43℉ WB
2. Rated Heating Conditions:	Indoor: 70℉ DB/60℉ WB
	Outdoor: 17℉ DB/15℉ WB
3. Heating Conditions, Compressor Operating at Max. Frequency	Indoor: 70℉ DB/60℉ WB
	Outdoor: 5℉ DB/5℉ WB

ELECTRICAL	
Indoor Power Supply	115/208/230V,60Hz,1Ph
Indoor MCA 115V/(208/230V)	8.0/6.0
Indoor MOP	15
Outdoor Power Supply	208/230V,60Hz,1Ph
Outdoor MCA	29.5
Outdoor MOP	30
Communication Wiring	AWG 20-2
Compressor RLA	22.4
Outdoor Fan Motor RLA	1.5
Outdoor Fan Motor W	120
Indoor Fan Motor RLA	4.5
Indoor Fan Motor W	375
System Power Input @ Cooling (W)	2567(850 ~ 3620)
System Power Input @ Heating (W)	2790(655 ~3020)
MCA: Min. circuit amps (A)	**MOCP: Max. over current protection (A)**
RLA: Rated load amps (A)	**W: Fan motor rated output (W)**

PIPING	
Throttle type(Indoor)	EXV
Throttle type(Outdoor)	EXV
Liquid Size	9.52mm(3/8in)
Gas Size	19mm(3/4in)
Max. Piping Length(ft/m)	164(50)
Max. Height Difference(ft/m)	82(25)
Max. Pre-charged Length(ft/m)	24.6(7.5)
Refrigerant Pre-charged Amount(oz/kg)	105.82(3)
Additional Charge of Refrigerant((oz/ft)/(g/m))	0.7(65)
Connection Method	Flared

Indoor Unit Dimension

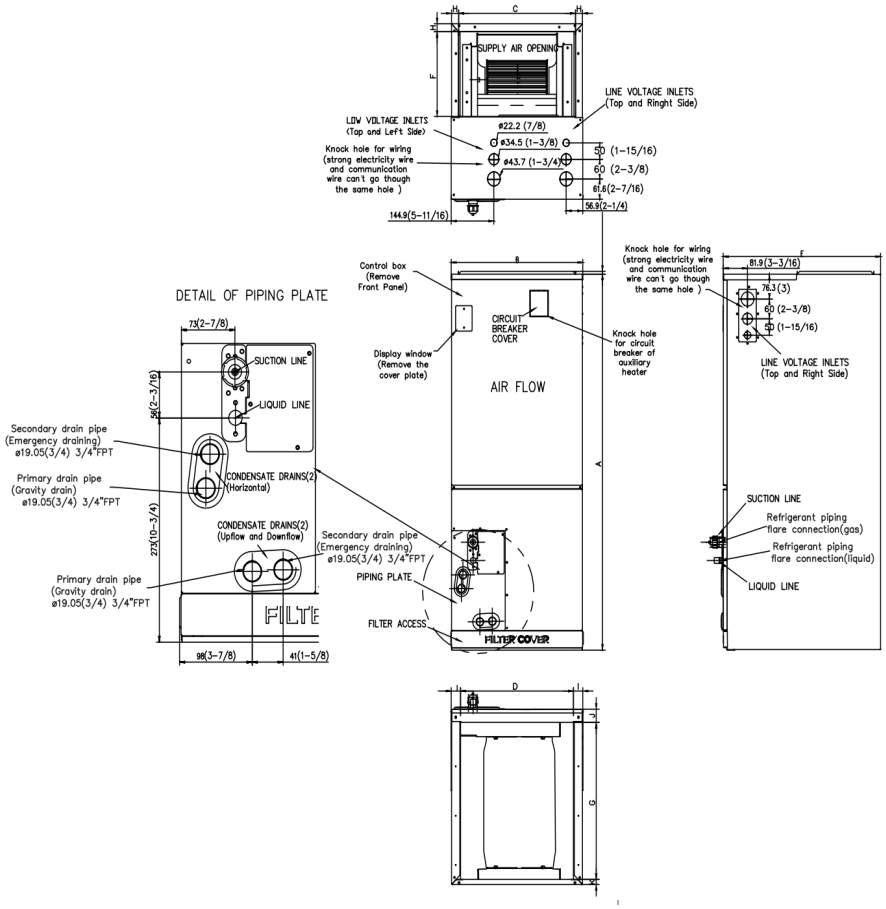

Dimensions	Model	18k/24k		30k/36k		48k/60k	
		inch	mm	inch	mm	inch	mm
A	Model Height	45	1143	49	1245	53	1346
B	Model Width	17-1/2	445	21	534	24-1/2	622
C	Supply Air Opening Width	15-5/8	397	19-1/8	486	22-5/8	575
D	Return Air Opening Width	15-1/8	384	18-5/8	473	22-1/8	562
E	Model Depth	21	534	21	534	21	534
F	Supply Air Opening Depth	10-1/4	260	10-1/4	260	10-1/4	260
G	Return Air Opening Depth	18-3/4	476	18-3/4	476	18-3/4	476
H	Supply Air Opening Clearance	15/16	24	15/16	24	15/16	24
I	Return Air Opening Side Clearance	1-1/4	32	1-1/4	32	1-1/8	28
J	Return Air Opening Front Clearance	1-1/2	38	1-5/8	41	1-5/8	41
K	Return Air Opening Back Clearance	5/8	16	5/8	16	3/4	19

Outdoor Unit Dimension

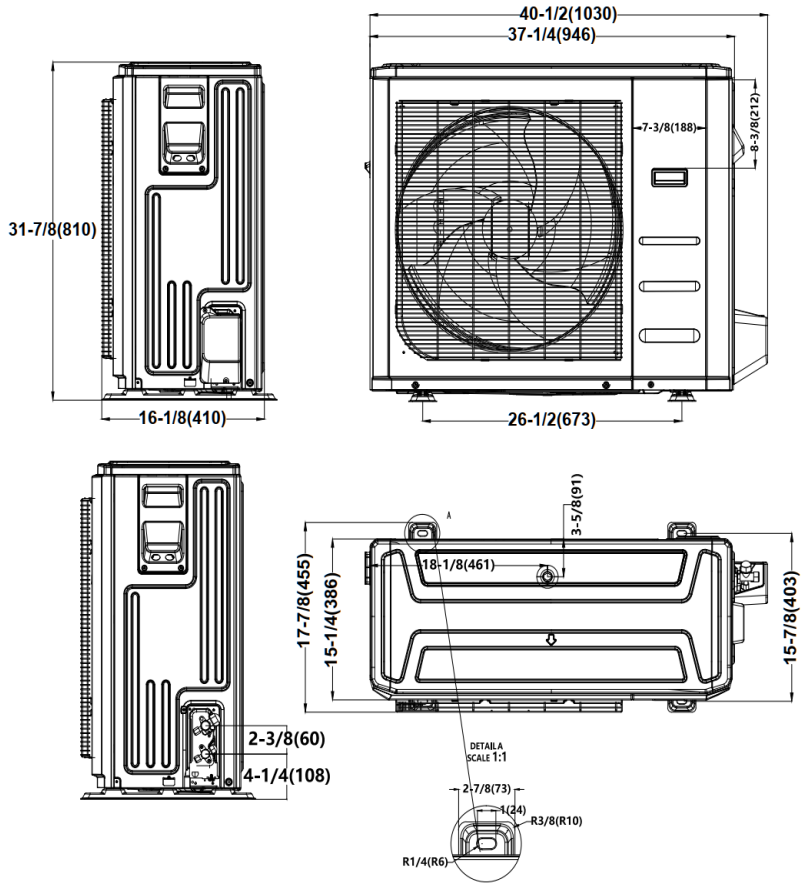

Installation Instruction For Outdoor Unit

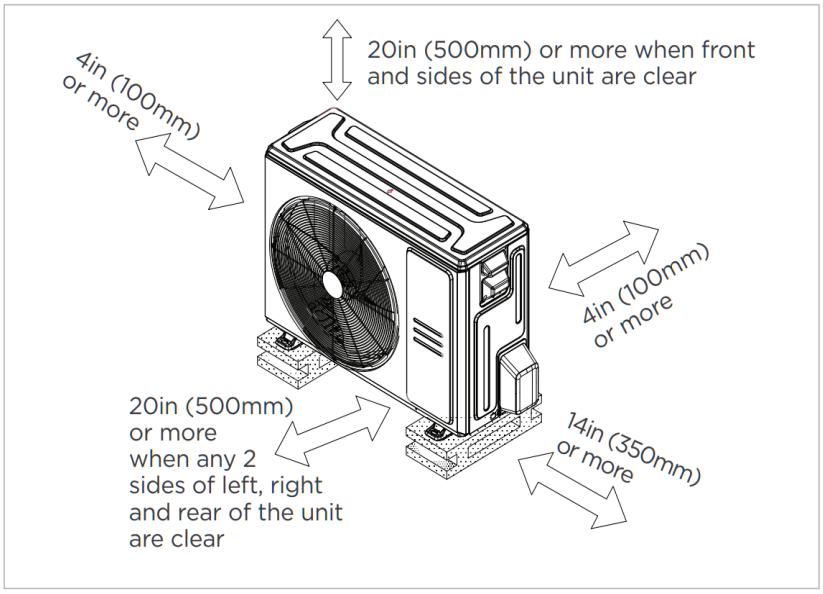

☑ Meets all spatial requirements shown in Installation Clearance Requirements above.

Fan Performance For Indoor Unit

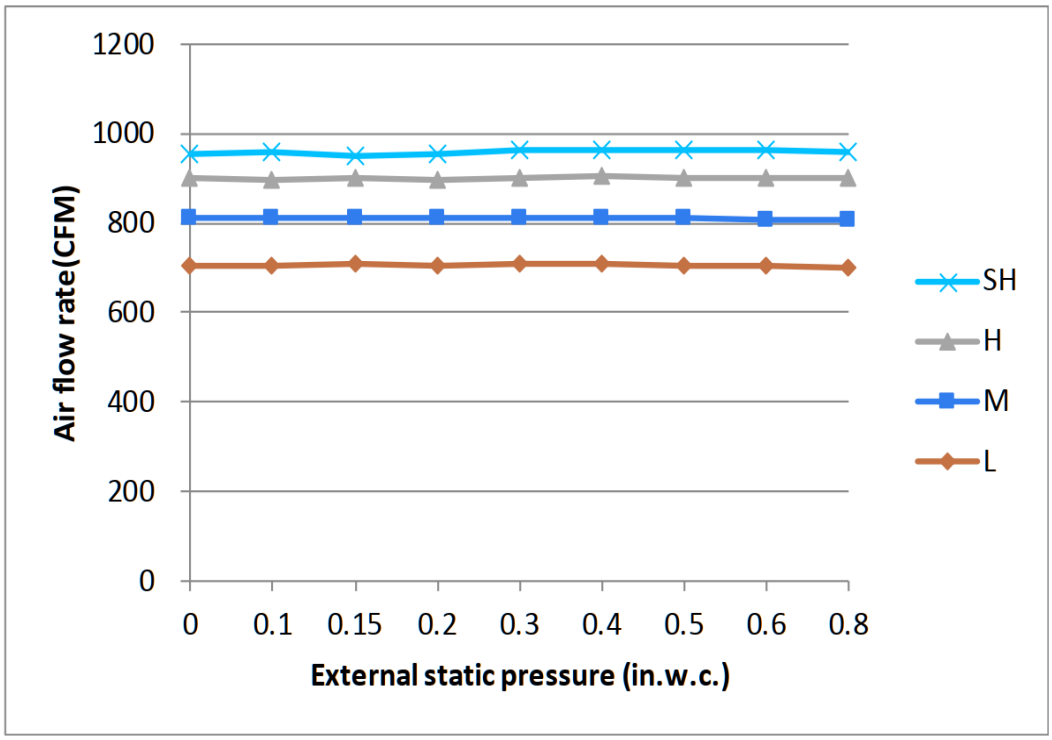

Features

- Multi-position installation: horizontal(left or right), vertical(up or down)
- Aluminum Coil
- Constantly Air Flow system up to 0.80 In.W.G
- 1 inch R4.2 fiberglass free insulation reduces condensation and boosts efficiency(optional)
- Optional Auxiliary heat kit up to 25kW
- Easy Maintenance
- Multiple control options available:
  - Two way communication wired controller:120N(X6)
  - Two way communication wired controller with built-in WiFi:120N(X6W)
  - Wireless remote controller
  - Third-Party 24V Thermostat
- Adaptive Control System
- High efficiency up to 19 SEER2, 12.5 EER2, 10.3 HSPF2
- 100% heat output at -4F*
- Chassis heater and crankcase heater equipped as standard

* For 36K model, rated cooling capacity/heating capacity at -4F=100%