SUBMITTAL DATA SHEET

Console Heat Pump System BXS3A12SC0-12LW0	
Location:	Approval:
Engineer:	Date:
Submitted to:	Construction:
Submitted by:	Unit #:
Reference:	Drawing #:

INDOOR SPECIFICATION		
Indoor Air Flow (Turbo/H/M/L/Si) (CFM)		441.4 / 376.7 / 323.7 / 188.4 / 129.5
Indoor Noise Level (Turbo/H/M/L/Si) (dBA)		42/39/34.5/29.5/23.5
Dimension (W×D×H)	inch	31.26 x 7.87 x 24.45
	mm	794.0×200.0×621.0
Package (W×D×H)	inch	34.06 x 11.02 x 28.31
	mm	865×280×719
Net/Gross Weight	lbs	32.85/41.89
	kg	14.9/19

OUTDOOR SPECIFICATION		
Compressor Type		ROTARY
Compressor Model		KSK103D33UEZ3
Refrigerant		R454B
Refrigerant Oil Charge(mL)		310
Refrigerant Oil		VG74
Outdoor Air Flow (Max) (CFM)		1236.1
Outdoor Noise Level (dBA)		54.5
Dimension (W×D×H)	inch	30.12 x 11.93 x 21.85
	mm	765.0×303.0×555.0
Package (W×D×H)	inch	34.92 x 13.27 x 24.02
	mm	887×337×610
Net/Gross Weight	lbs	62.17/67.68
	kg	28.2/30.7

EFFICIENCY			
Cooling		Heating	
SEER2	24.6	HSPF2-4	11.0
EER2	12.7	COP	3.90

ELECTRICAL	
Power Supply	208/230V,60Hz,1Ph
System MCA	12.00
Connection Wiring	14#x4
System MOCP	15
Compressor RLA	7.3
Outdoor Fan Motor RLA	0.6
Outdoor Fan Motor W	34
Indoor Fan Motor RLA	0.5
Indoor Fan Motor W	13
System Power Input @ Cooling (W)	960(200 ~ 1140)
System Power Input @ Heating (W)	897(265 ~1200)
MCA: Min. circuit amps (A)	**MOCP**: Max. over current protection (A)
RLA: Rated load amps (A)	**W:** Fan motor rated output (W)

PERFORMANCE of Cooling	
Cooling (Btu/hr)	
Rated Capacity	12000
Min/Max Capacity	4000~13100
Moisture Removal(L/h)	1.28
Standard Operating Range(℉/℃)	-13~122(-25～50)
Conditions:	Indoor: 80℉ DB/67℉ WB
	Outdoor: 95℉ DB/75℉ WB

PERFORMANCE of Heating	
Heating (Btu/hr)	
1. @ 47℉ Rated	12000
1. @ 47℉ Min/Max Capacity	5100~12900
2. @ 17℉ Rated	9000
3. @ 5℉ Rated: Capacity / COP	8900/2.50
3. @ 5℉ Max: Capacity	8900
Standard Operating Range(℉/℃)	-13~75(-25～24)
1. Conditions:	Indoor: 70℉ DB/60℉ WB
	Outdoor: 47℉ DB/43℉ WB
2. Conditions:	Indoor: 70℉ DB/60℉ WB
	Outdoor: 17℉ DB/15℉ WB
3. Conditions	Indoor: 70℉ DB/60℉ WB
	Outdoor: 5℉ DB/5℉ WB

PIPING	
Throttle type(Indoor)	N/A
Throttle type(Outdoor)	EXV
Liquid Size	6.35mm(1/4in)
Gas Size	9.52mm(3/8in)
Max. Piping Length(ft/m)	82.00(25)
Max. Height Difference(ft/m)	49.20(15)
Max. Pre-charged Length(ft/m)	24.6(7.5)
Refrigerant Pre-charged Amount(oz/kg)	32.45(0.92)
Additional Charge of Refrigerant((oz/ft)/(g/m))	0.16(15)
Connection Method	Flared

Indoor Unit Dimension

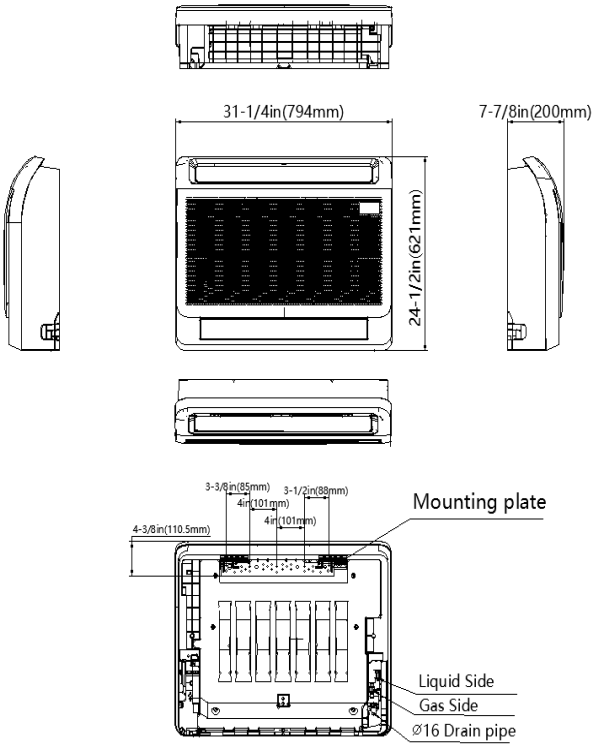

Installation Instruction

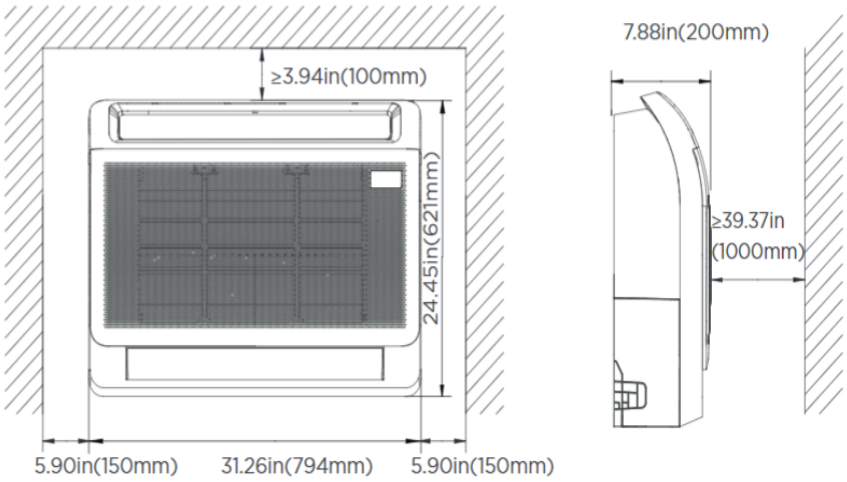

Outdoor Unit Dimension

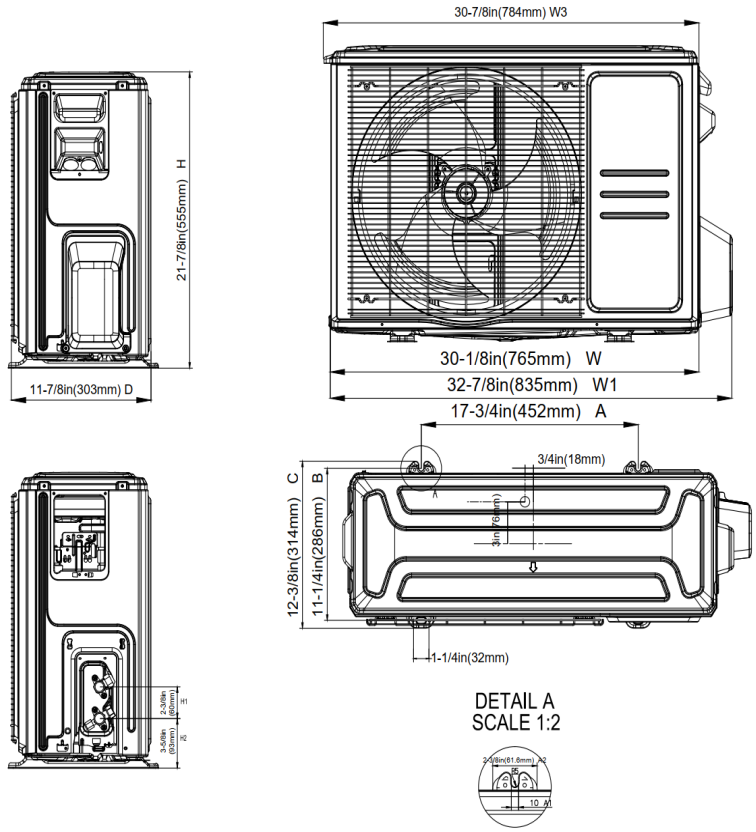

Installation Instruction

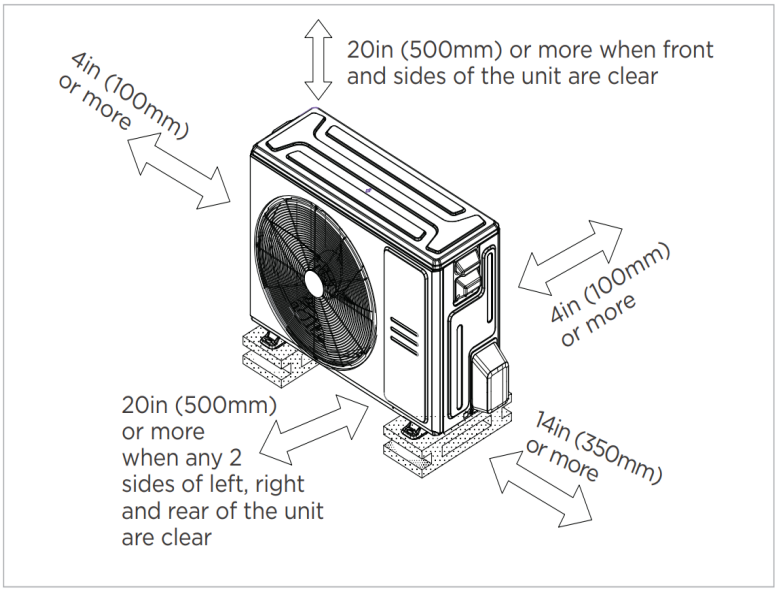

☑ Meets all spatial requirements shown in Installation Clearance Requirements above.

FEATURES

- Compact Design
- Dual Air Outlets
- Refrigerant leakage detection sensor
- Humidity sensor
- 1~100% fan speed setting
- WiFi capability: through WiFi dongle or wired controller with built-in WiFi
- OTA(by using WiFi dongle)
- Multiple control options available:
  - Two way communication wired controller:120N(X6)
  - Two way communication wired controller with built-in WiFi:120N(X6W)
  - Infrared wired controller: 120L
  - Wireless remote controller
  - Third-Party 24V Thermostat*

*24V interface is required.