SUBMITTAL DATA SHEET

Console Heat Pump System BXS3A18SC0-16LW0	
Location:	Approval:
Engineer:	Date:
Submitted to:	Construction:
Submitted by:	Unit #:
Reference:	Drawing #:

INDOOR SPECIFICATION		
Indoor Air Flow (Turbo/H/M/L/Si) (CFM)		500.3 / 441.4 / 382.6 / 323.7 / 206.0
ndoor Noise Level (Turbo/H/M/L/Si) (dBA		41.5/41.5/39/28.5/24
Dimension (W×D×H)	inch	31.26 x 7.87 x 24.45
	mm	794.0×200.0×621.0
Package (W×D×H)	inch	34.06 x 11.02 x 28.31
	mm	865×280×719
Net/Gross Weight	lbs	32.85/41.89
	kg	14.9/19.0

OUTDOOR SPECIFICATION		
Compressor Type		ROTARY
Compressor Model		KSN140D58UFZ
Refrigerant		R454B
Refrigerant Oil Charge(mL)		440
Refrigerant Oil		VG74
Outdoor Air Flow (Max) (CFM)		1765.8
Outdoor Noise Level (dBA)		57.0
Dimension (W×D×H)	inch	35.04 x 13.46 x 26.50
	mm	890.0×342.0×673.0
Package (W×D×H)	inch	39.17 x 15.67 x 29.13
	mm	995×398×740
Net/Gross Weight	lbs	92.59/100.31
	kg	42.0/45.5

EFFICIENCY			
Cooling		Heating	
SEER2	23.8	HSPF2-4	13.5
EER2	12.5	COP	3.37

ELECTRICAL	
Power Supply	208/230V,60Hz,1Ph
System MCA	18.00
Connection Wiring	14#x4
System MOCP	20
Compressor RLA	10.0
Outdoor Fan Motor RLA	0.9
Outdoor Fan Motor W	80
Indoor Fan Motor RLA	1.0
Indoor Fan Motor W	13
System Power Input @ Cooling (W)	1280(440 ~ 1600)
System Power Input @ Heating (W)	1478(385 ~1830)
MCA: Min. circuit amps (A)	**MOCP**: Max. over current protection (A)
RLA: Rated load amps (A)	**W:** Fan motor rated output (W)

PERFORMANCE of Cooling	
Cooling (Btu/hr)	
Rated Capacity	16000
Min/Max Capacity	4700~18000
Moisture Removal(L/h)	2.19
Standard Operating Range(℉/℃)	-13~122(-25～50)
Conditions:	Indoor: 80℉ DB/67℉ WB
	Outdoor: 95℉ DB/75℉ WB

PERFORMANCE of Heating	
Heating (Btu/hr)	
1. @ 47℉ Rated	17000
1. @ 47℉ Min/Max Capacity	7300~22900
2. @ 17℉ Rated	14100
3. @ 5℉ Rated: Capacity / COP	13100/2.16
3. @ 5℉ Max: Capacity	13100
Standard Operating Range(℉/℃)	-13~75(-25～24)
1. Conditions:	Indoor: 70℉ DB/60℉ WB
	Outdoor: 47℉ DB/43℉ WB
2. Conditions:	Indoor: 70℉ DB/60℉ WB
	Outdoor: 17℉ DB/15℉ WB
3. Conditions	Indoor: 70℉ DB/60℉ WB
	Outdoor: 5℉ DB/5℉ WB

PIPING	
Throttle type(Indoor)	N/A
Throttle type(Outdoor)	EXV+Throttle valve
Liquid Size	6.35mm(1/4in)
Gas Size	12.7mm(1/2in)
Max. Piping Length(ft/m)	98.40(30)
Max. Height Difference(ft/m)	65.60(20)
Max. Pre-charged Length(ft/m)	24.6(7.5)
Refrigerant Pre-charged Amount	47.97(1.36)
ditional Charge of Refrigerant((oz/ft)/(g/n	0.16(15)
Connection Method	Flared

Indoor Unit Dimension

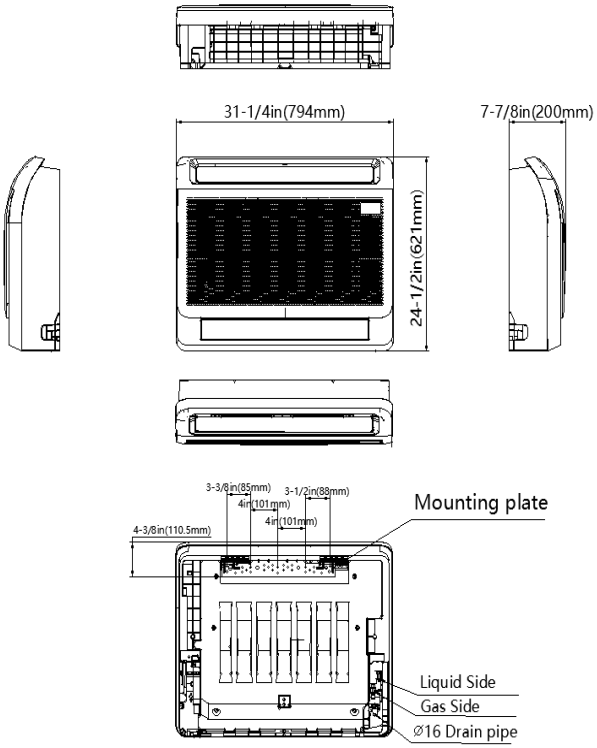

Installation Instruction

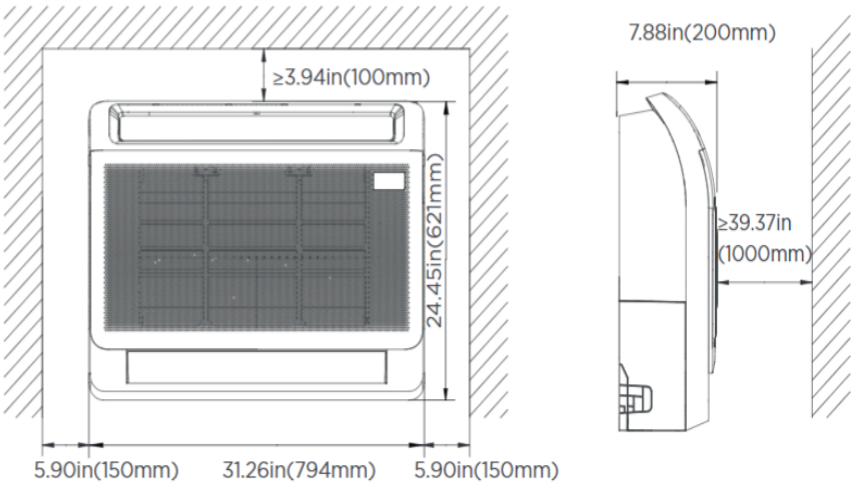

Outdoor Unit Dimension

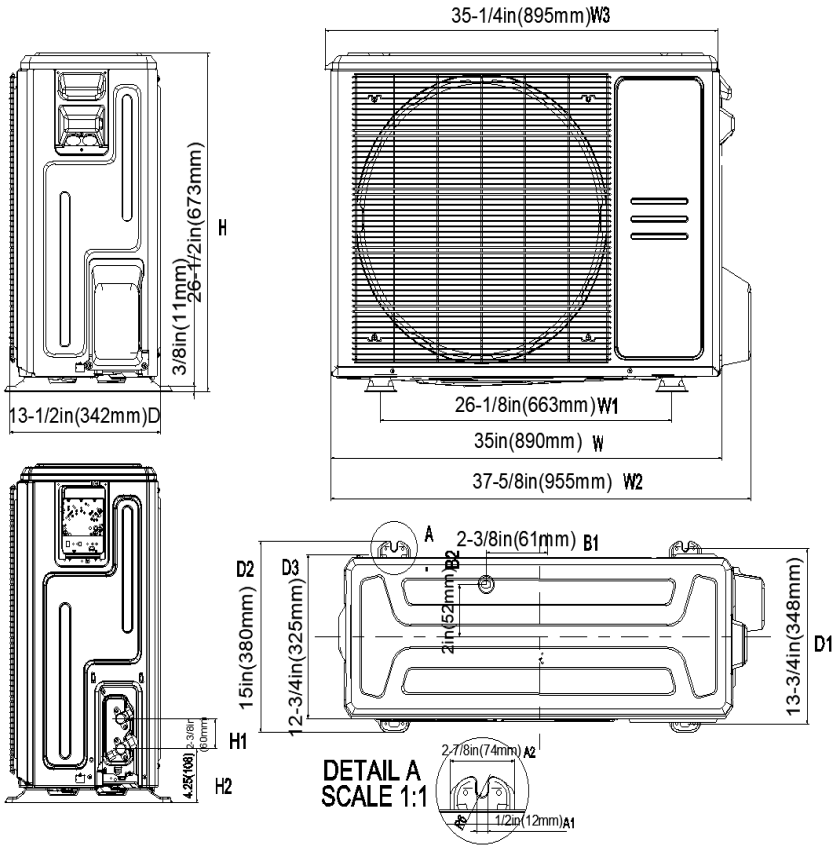

Installation Instruction

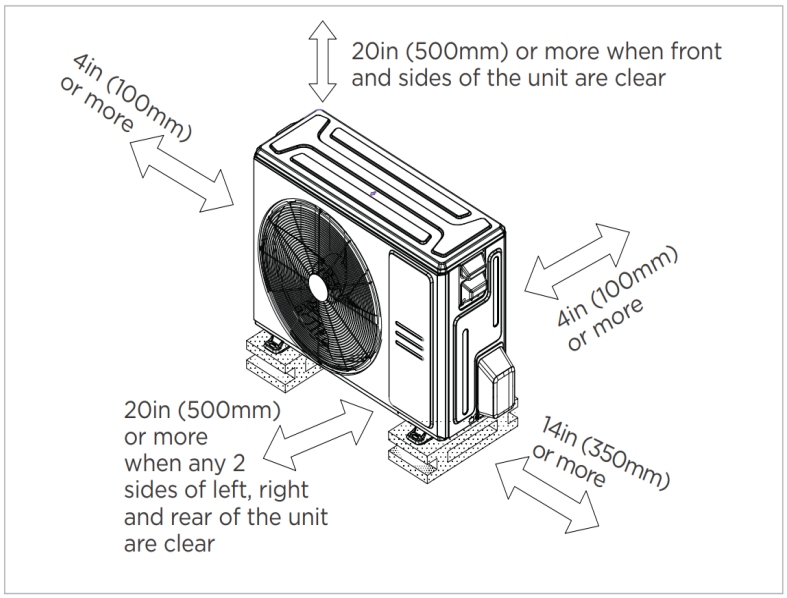

☑ Meets all spatial requirements shown in Installation Clearance Requirements above.

FEATURES

- Compact Design
- Dual Air Outlets
- Refrigerant leakage detection sensor
- Humidity sensor
- 1~100% fan speed setting
- WiFi capability: through WiFi dongle or wired controller with built-in WiFi
- OTA(by using WiFi dongle)
- Multiple control options available:
  - Two way communication wired controller:120N(X6)
  - Two way communication wired controller with built-in WiFi:120N(X6W)
  - Infrared wired controller: 120L
  - Wireless remote controller
  - Third-Party 24V Thermostat*

*24V interface is required.