SUBMITTAL DATA SHEET

4-Way Cassette Heat Pump System BXS3A18SC0-18CC4	
Location:	Approval:
Engineer:	Date:
Submitted to:	Construction:
Submitted by:	Unit #:
Reference:	Drawing #:

INDOOR SPECIFICATION		
Indoor Air Flow (Turbo/H/M/L/Si) (CFM)		447.3 / 388.5 / 317.8 / 194.2 / 147.2
Indoor Noise Level (Turbo/H/M/L/Si) (dBA)		48/44.0/41.0/28.5/24.5
Dimension (W×D×H)	inch	22.44 x 22.44 x 9.65
	mm	570.0×570.0×245.0
Package (W×D×H)	inch	28.15 x 25.20 x 11.61
	mm	715×640×295
Net/Gross Weight	lbs	35.27/41.89
	kg	16.0/19.0

OUTDOOR SPECIFICATION		
Compressor Type		ROTARY
Compressor Model		KSN140D58UFZ
Refrigerant		R454B
Refrigerant Oil Charge(mL)		440
Refrigerant Oil		VG74
Outdoor Air Flow (Max) (CFM)		1765.8
Outdoor Noise Level (dBA)		57.5
Dimension (W×D×H)	inch	35.04 x 13.46 x 26.50
	mm	890.0×342.0×673.0
Package (W×D×H)	inch	39.17 x 15.67 x 29.13
	mm	995×398×740
Net/Gross Weight	lbs	92.59/100.31
	kg	42.0/45.5

EFFICIENCY			
Cooling		Heating	
SEER2	20.7	HSPF2-4	11.4
EER2	12.5	COP	3.36

ELECTRICAL	
Power Supply	208/230V,60Hz,1Ph
System MCA	18.00
Connection Wiring	14#x4
System MOCP	20
Compressor RLA	10.0
Outdoor Fan Motor RLA	0.9
Outdoor Fan Motor W	80
Indoor Fan Motor RLA	1.0
Indoor Fan Motor W	45
System Power Input @ Cooling (W)	1344(490 ~ 1620)
System Power Input @ Heating (W)	1570(395 ~1930)
MCA: Min. circuit amps (A)	**MOCP**: Max. over current protection (A)
RLA: Rated load amps (A)	**W:** Fan motor rated output (W)

PERFORMANCE of Cooling	
Cooling (Btu/hr)	
Rated Capacity	16800
Min/Max Capacity	5300~17800
Moisture Removal(L/h)	2.05
Standard Operating Range(℉/℃)	-13~122(-25～50)
Conditions:	Indoor: 80℉ DB/67℉ WB
	Outdoor: 95℉ DB/75℉ WB

PERFORMANCE of Heating	
Heating (Btu/hr)	
1. @ 47℉ Rated	18000
1. @ 47℉ Min/Max Capacity	7100~21500
2. @ 17℉ Rated	13900
3. @ 5℉ Rated: Capacity / COP	12800/2.20
3. @ 5℉ Max: Capacity	12800
Standard Operating Range(℉/℃)	-13~75(-25～24)
1. Conditions:	Indoor: 70℉ DB/60℉ WB
	Outdoor: 47℉ DB/43℉ WB
2. Conditions:	Indoor: 70℉ DB/60℉ WB
	Outdoor: 17℉ DB/15℉ WB
3. Conditions	Indoor: 70℉ DB/60℉ WB
	Outdoor: 5℉ DB/5℉ WB

PIPING	
Throttle type(Indoor)	N/A
Throttle type(Outdoor)	EXV+Throttle valve
Liquid Size	6.35mm(1/4in)
Gas Size	12.7mm(1/2in)
Max. Piping Length(ft/m)	98.40(30)
Max. Height Difference(ft/m)	65.60(20)
Max. Pre-charged Length(ft/m)	24.6(7.5)
Refrigerant Pre-charged Amount(oz/kg)	47.97(1.36)
Additional Charge of Refrigerant((oz/ft)/(g/m))	0.16(15)
Connection Method	Flared

Indoor Unit Dimension

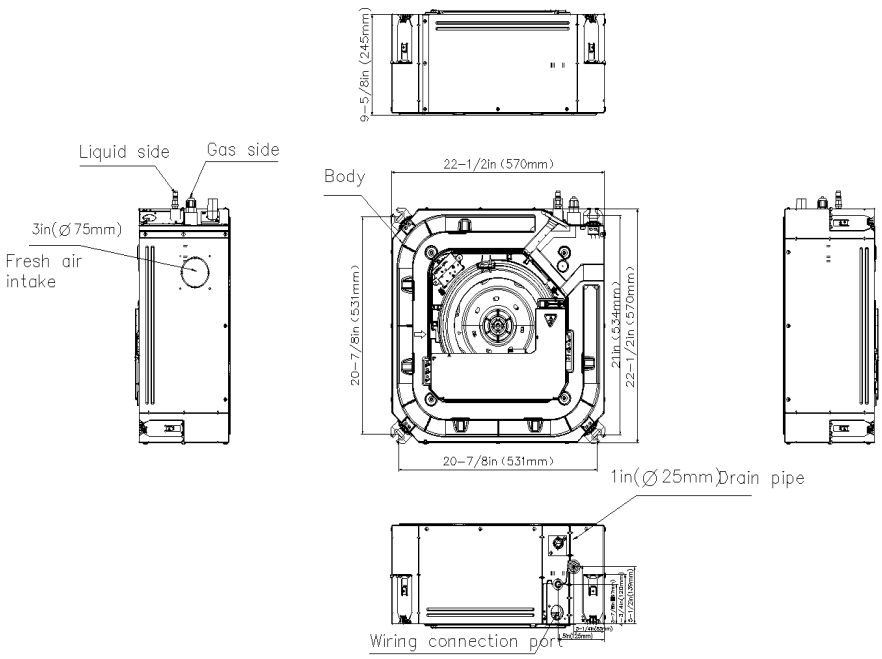

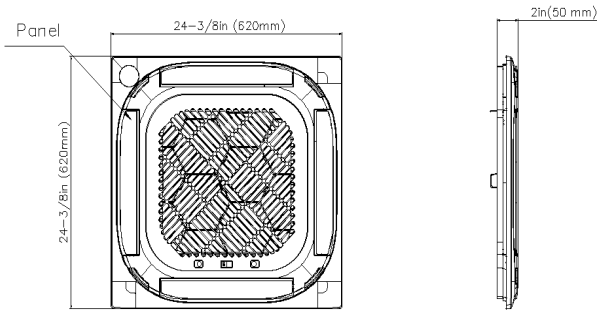

Installation Instruction

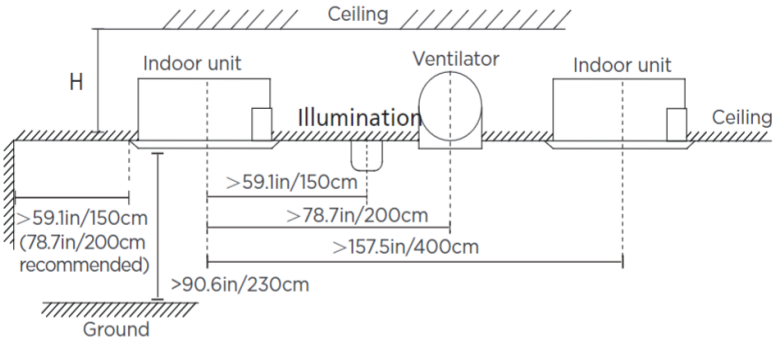

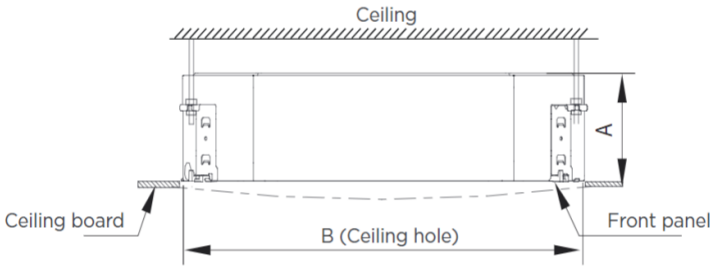

Distance from ceiling relative to height of indoor unit

MODEL	Length of A	Length of H	Length of B
9K/12K/18K	9.6in (245mm)	>10.8in (275mm)	23.6in (600mm)
24K	8.03in (205mm)	9.06in (230mm)	35.4in (900mm)
36K	9.65in (245mm)	10.7in (271mm)	
48K	11.3in (287mm)	12.3in (313mm)	

Outdoor Unit Dimension

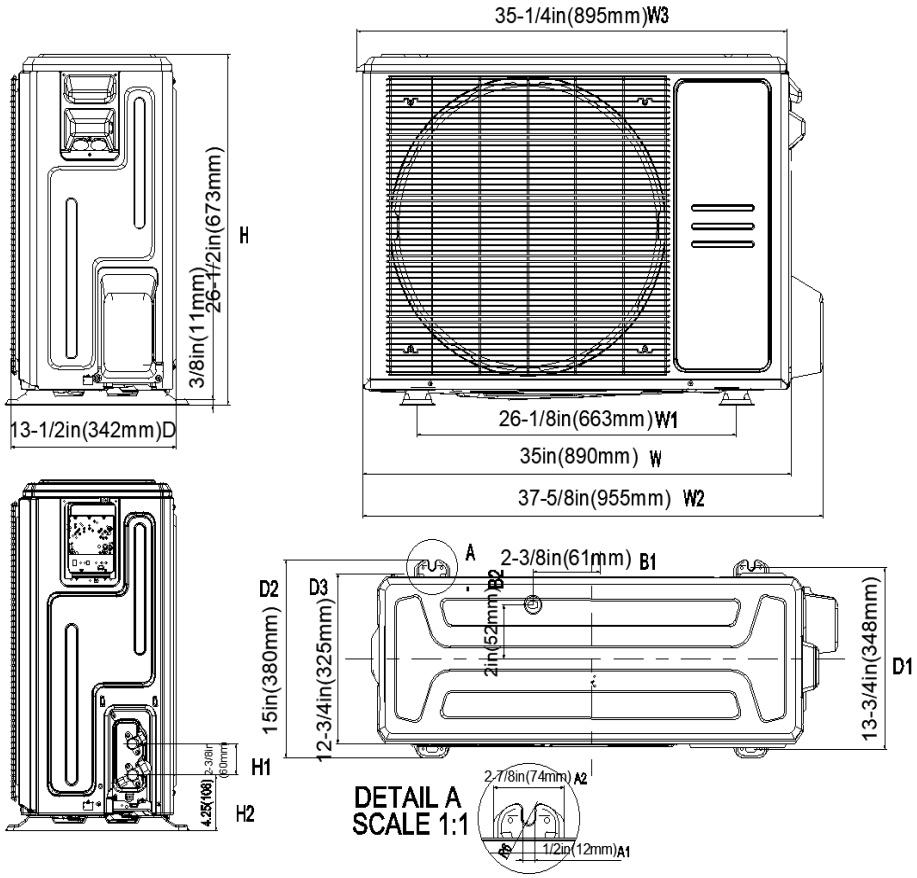

Installation Instruction

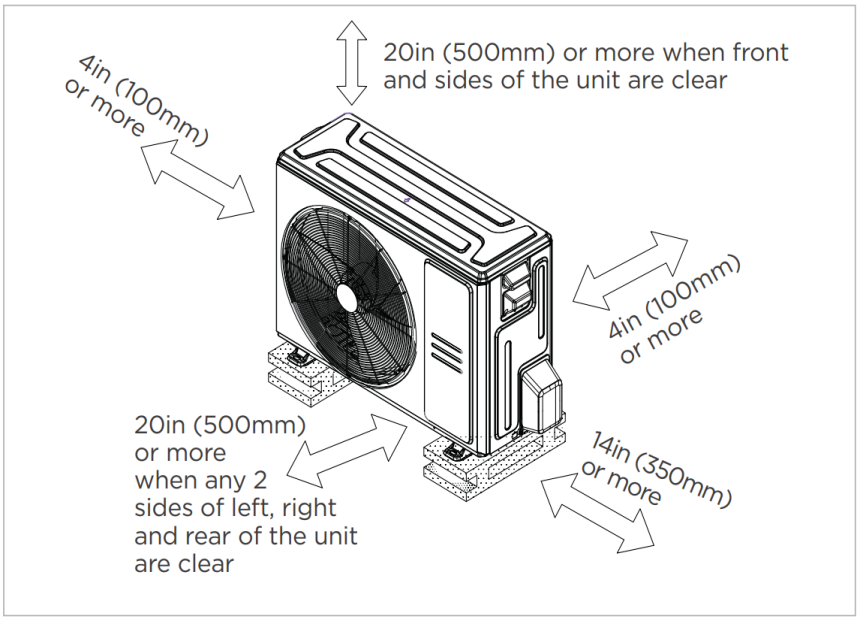

☑ Meets all spatial requirements shown in Installation Clearance Requirements above.

FEATURES

- 360° Air Flow
- Remote on-off and alarm ports
- Refrigerant leakage detection sensor(Optional)
- Humidity sensor
- Built-in pump
- 1~100% fan speed setting
- WiFi capability: through WiFi dongle or wired controller with built-in WiFi
- OTA(by using WiFi dongle)
- 2-pin connector(HA/HB) for programmable wired controller
- Multiple control options available:
  - Two way communication wired controller:120N(X6)
  - Two way communication wired controller with built-in WiFi:120N(X6W)
  - Infrared wired controller: 120L
  - Wireless remote controller
  - Third-Party 24V Thermostat*

*24V interface is required.