SUBMITTAL DATA SHEET

Ceiling&Floor Heat Pump System BXS3A18SC0-18FC0	
Location:	Approval:
Engineer:	Date:
Submitted to:	Construction:
Submitted by:	Unit #:
Reference:	Drawing #:

INDOOR SPECIFICATION		
Indoor Air Flow (Turbo/H/M/L/Si) (CFM)		576.8 / 547.4 / 485.6 / 420.8 /N\A
Indoor Noise Level (Turbo/H/M/L/Si) (dBA)		N\A/43.0/40.0/32.0/29.0
Dimension (W×D×H)	**inch**	42.05 x 26.57 x 9.25
	mm	1068.0×675.0×235.0
Package (W×D×H)	**inch**	45.08 x 29.72 x 12.52
	mm	1145×755×318
Net/Gross Weight	**lbs**	58.42/70.55
	kg	26.5/32.0

OUTDOOR SPECIFICATION		
Compressor Type		ROTARY
Compressor Model		KSN140D58UFZ
Refrigerant		R454B
Refrigerant Oil Charge(mL)		440
Refrigerant Oil		VG74
Outdoor Air Flow (Max) (CFM)		1765.8
Outdoor Noise Level (dBA)		57.0
Dimension (W×D×H)	**inch**	35.04 x 13.46 x 26.50
	mm	890.0×342.0×673.0
Package (W×D×H)	**inch**	39.17 x 15.67 x 29.13
	mm	995×398×740
Net/Gross Weight	**lbs**	92.59/100.31
	kg	42.0/45.5

EFFICIENCY			
Cooling		**Heating**	
SEER2	22.3	**HSPF2-4**	10.4
EER2	12.5	**COP**	3.30

ELECTRICAL	
Power Supply	208/230V,60Hz,1Ph
System MCA	18.00
Connection Wiring	14#x4
System MOCP	20
Compressor RLA	10.0
Outdoor Fan Motor RLA	0.9
Outdoor Fan Motor W	80
Indoor Fan Motor RLA	1.0
Indoor Fan Motor W	96
System Power Input @ Cooling (W)	1440(570 ~ 1680)
System Power Input @ Heating (W)	1599(415 ~1990)
MCA: Min. circuit amps (A)	**MOCP**: Max. over current protection (A)
RLA: Rated load amps (A)	**W:** Fan motor rated output (W)

PERFORMANCE of Cooling	
Cooling (Btu/hr)	
Rated Capacity	18000
Min/Max Capacity	7000~19300
Moisture Removal(L/h)	2.10
Standard Operating Range(℉/℃)	-13~122(-25～50)
Conditions:	Indoor: 80℉ DB/67℉ WB
	Outdoor: 95℉ DB/75℉ WB

PERFORMANCE of Heating	
Heating (Btu/hr)	
1. @ 47℉ Rated	18000
1. @ 47℉ Min/Max Capacity	7200~22200
2. @ 17℉ Rated	13700
3. @ 5℉ Rated: Capacity / COP	12800/2.05
3. @ 5℉ Max: Capacity	12800
Standard Operating Range(℉/℃)	-13~75(-25～24)
1. Conditions:	Indoor: 70℉ DB/60℉ WB
	Outdoor: 47℉ DB/43℉ WB
2. Conditions:	Indoor: 70℉ DB/60℉ WB
	Outdoor: 17℉ DB/15℉ WB
3. Conditions	Indoor: 70℉ DB/60℉ WB
	Outdoor: 5℉ DB/5℉ WB

PIPING	
Throttle type(Indoor)	N/A
Throttle type(Outdoor)	EXV+Throttle valve
Liquid Size	6.35mm(1/4in)
Gas Size	12.7mm(1/2in)
Max. Piping Length(ft/m)	98.40(30)
Max. Height Difference(ft/m)	65.60(20)
Max. Pre-charged Length(ft/m)	24.6(7.5)
Refrigerant Pre-charged Amount(oz/kg)	47.97(1.36)
Additional Charge of Refrigerant((oz/ft)/(g/m))	0.16(15)
Connection Method	Flared

Indoor Unit Dimension

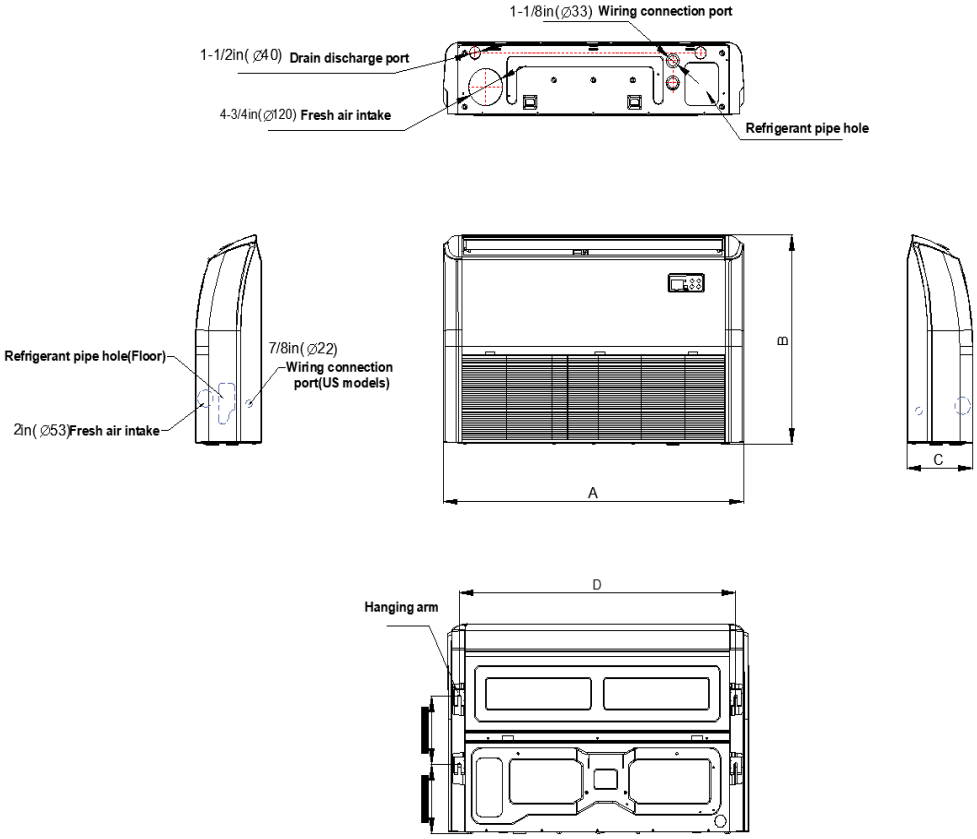

Model	A	B	C	D
18K/24K	42in(1068mm)	26-1/2in(675mm)	9-1/4in(235mm)	38-3/4in(983mm)
36K/48K/60K	65in(1650mm)	26-1/2in(675mm)	9-1/4in(235mm)	61-5/8in(1565mm)

Installation Instruction

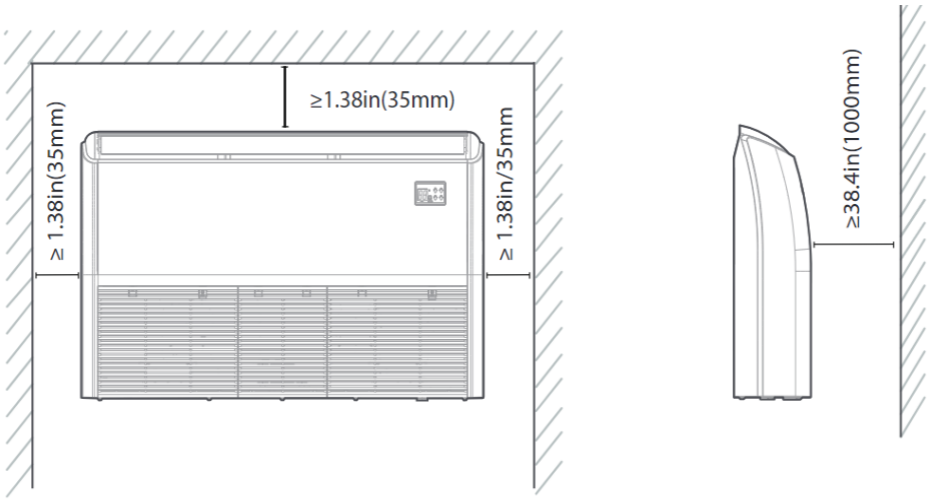

Outdoor Unit Dimension

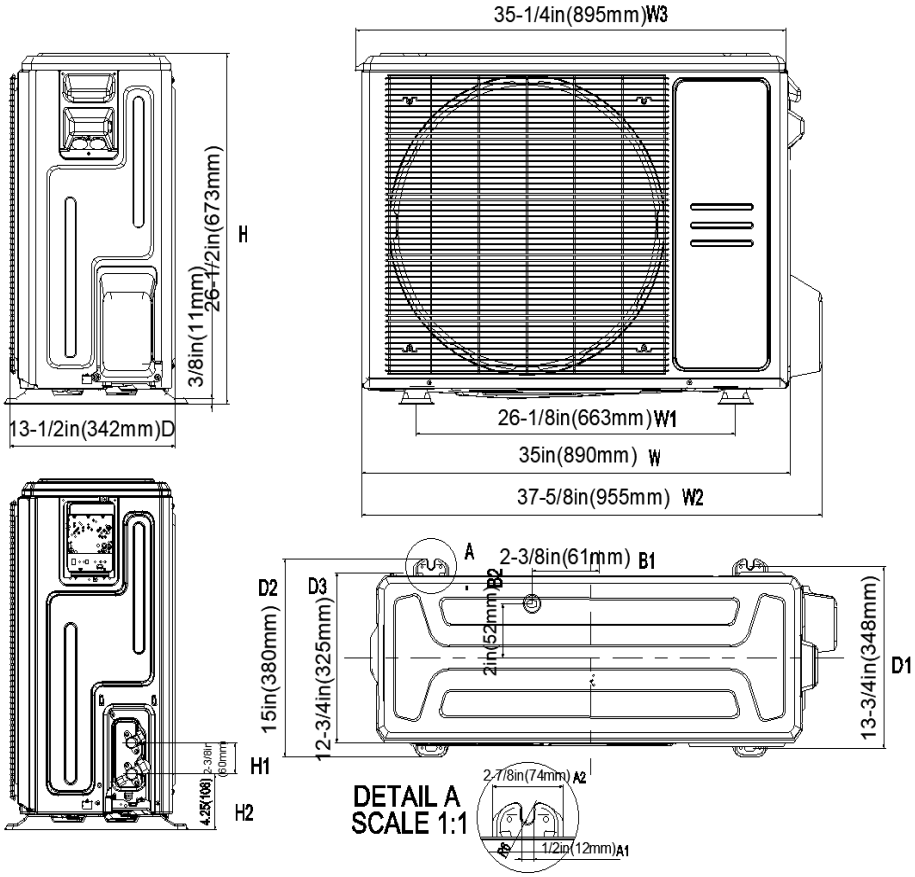

Installation Instruction

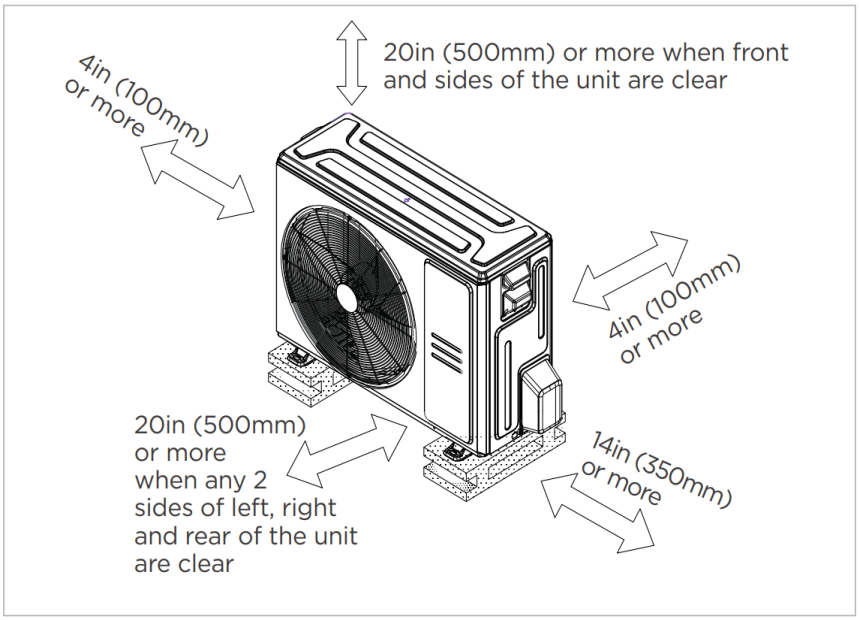

☑ Meets all spatial requirements shown in Installation Clearance Requirements above.

FEATURES

- 2 Style Installation
- 3D Airflow
- Refrigerant leakage detection sensor
- Humidity sensor
- “88” display tube
- 1~100% fan speed setting
- WiFi capability: through WiFi dongle or wired controller with built-in WiFi
- OTA(by using WiFi dongle)
- 2-pin connector(HA/HB) for programmable wired controller
- Multiple control options available:
  - Two way communication wired controller:120N(X6)
  - Two way communication wired controller with built-in WiFi:120N(X6W)
  - Infrared wired controller: 120L
  - Wireless remote controller
  - Third-Party 24V Thermostat*

*24V interface is required.