SUBMITTAL DATA SHEET

Slim Duct Heat Pump System BXS3A24SC0-24CDH	
Location:	Approval:
Engineer:	Date:
Submitted to:	Construction:
Submitted by:	Unit #:
Reference:	Drawing #:

INDOOR SPECIFICATION		
Indoor Air Flow (Turbo/H/M/L/Si) (CFM)		853.5 / 706.3 / 618.0 / 500.3 / N\A
Indoor Noise Level (Turbo/H/M/L/Si) (dBA)		43/40.0/38/35.5/29.5
Indoor static pressure range		0-0.8
Dimension (W×D×H)	inch	39.37 x 29.53 x 9.65
	mm	1000.0×750.0×245.0
Package (W×D×H)	inch	48.23 x 33.86 x 11.97
	mm	1225×860×304
Net/Gross Weight	lbs	80.47/91.93
	kg	36.5/41.7

OUTDOOR SPECIFICATION		
Compressor Type		ROTARY
Compressor Model		KTM240D46UKT2
Refrigerant		R454B
Refrigerant Oil Charge(mL)		620
Refrigerant Oil		4.15/9.30
Outdoor Air Flow (Max) (CFM)		2236.7
Outdoor Noise Level (dBA)		60.0
Dimension (W×D×H)	inch	37.24 x 16.14 x 31.89
	mm	946.0×410.0×810.0
Package (W×D×H)	inch	42.91 x 19.68 x 34.84
	mm	1090×500×885
Net/Gross Weight	lbs	122.13/132.28
	kg	55.4/60.0

EFFICIENCY			
Cooling		Heating	
SEER2	19.0	HSPF2-4	11.0
EER2	12.5	COP	3.64

ELECTRICAL	
Power Supply	208/230V,60Hz,1Ph
System MCA	24.00
Connection Wiring	14#x4
System MOCP	25
Compressor RLA	15.4
Outdoor Fan Motor RLA	1.0
Outdoor Fan Motor W	120
Indoor Fan Motor RLA	2.2
Indoor Fan Motor W	165
System Power Input @ Cooling (W)	1920(960 ~ 2710)
System Power Input @ Heating (W)	2010(725 ~3000)
MCA: Min. circuit amps (A)	**MOCP**: Max. over current protection (A)
RLA: Rated load amps (A)	**W:** Fan motor rated output (W)

PERFORMANCE of Cooling	
Cooling (Btu/hr)	
Rated Capacity	24000
Min/Max Capacity	8500~28300
Moisture Removal(L/h)	2.14
Standard Operating Range(℉/℃)	-13~122(-25～50)
Conditions:	Indoor: 80℉ DB/67℉ WB
	Outdoor: 95℉ DB/75℉ WB

PERFORMANCE of Heating	
Heating (Btu/hr)	
1. @ 47℉ Rated	25000
1. @ 47℉ Min/Max Capacity	11800~35100
2. @ 17℉ Rated	21200
3. @ 5℉ Rated: Capacity / COP	19000/2.30
3. @ 5℉ Max: Capacity	19000
Standard Operating Range(℉/℃)	-13~75(-25～24)
1. Conditions:	Indoor: 70℉ DB/60℉ WB
	Outdoor: 47℉ DB/43℉ WB
2. Conditions:	Indoor: 70℉ DB/60℉ WB
	Outdoor: 17℉ DB/15℉ WB
3. Conditions	Indoor: 70℉ DB/60℉ WB
	Outdoor: 5℉ DB/5℉ WB

PIPING	
Throttle type(Indoor)	N/A
Throttle type(Outdoor)	EXV+Throttle valve
Liquid Size	9.52mm(3/8in)
Gas Size	15.9mm(5/8in)
Max. Piping Length(ft/m)	164.00(50)
Max. Height Difference(ft/m)	82.00(25)
Max. Pre-charged Length(ft/m)	24.6(7.5)
Refrigerant Pre-charged Amount(oz/kg)	70.55(2.00)
Additional Charge of Refrigerant((oz/ft)/(g/m))	0.32(30)
Connection Method	Flared

Indoor Unit Dimension

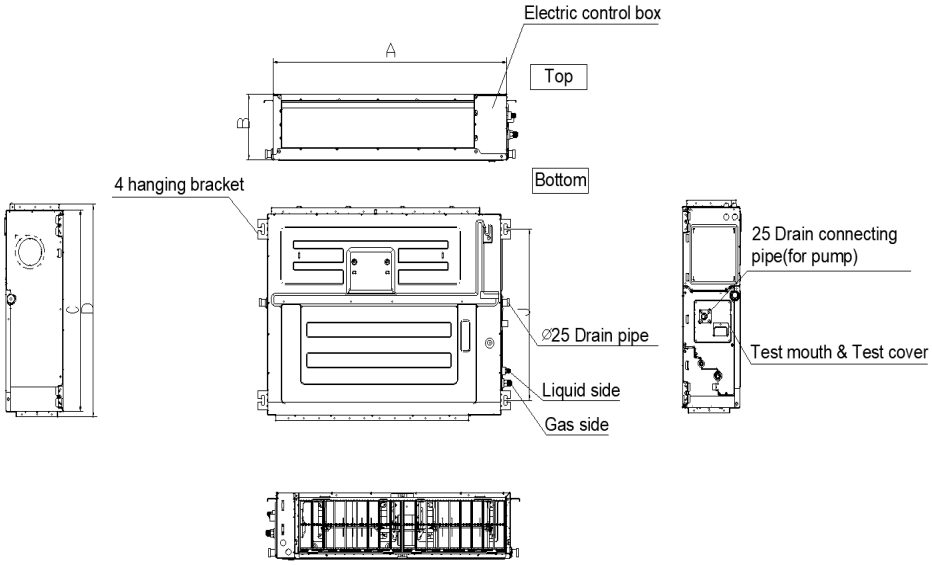

MODEL	A	B	C	D
9K	27-1/2in(700mm)	7-7/8in(200mm)	17-3/4(450mm)	20in(506mm)
12K	27-1/2in(700mm)	9-5/8in(245mm)	29-1/2(750mm)	31-1/4in(795mm)
18K~24K	39-3/8in(1000mm)	9-5/8in(245mm)	29-1/2(750mm)	31-1/4in(795mm)
36K~48K	47-1/8in(1200mm)	11-7/8in(300mm)	29-1/2(750mm)	31-1/4in(795mm)
60K	55-1/8in(1400mm)	15in(380mm)	31-1/2in(800mm)	33-1/4in(845mm)

Installation place

The distance between the mounted indoor unit should meet the specifications illlustrated in the following diagram.

1) Ceiling-mounted

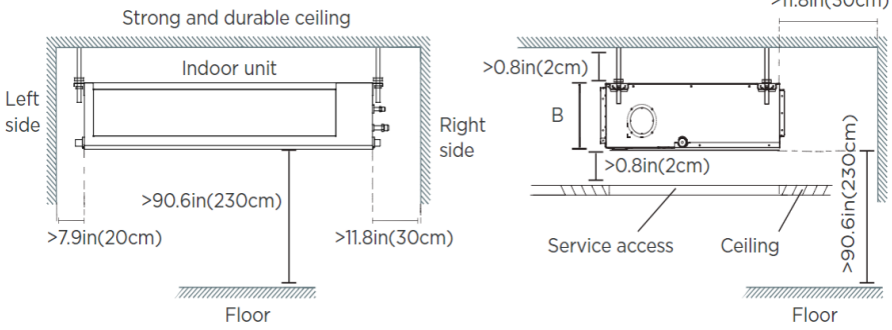

2) Wall-mounted

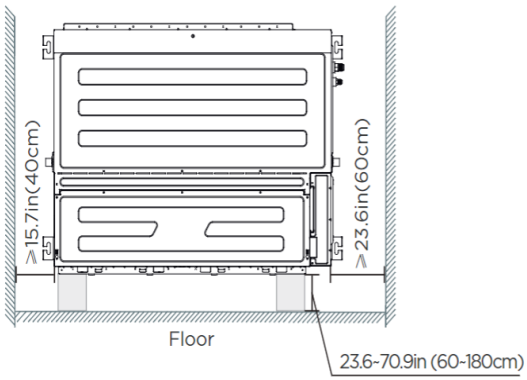

Outdoor Unit Dimension

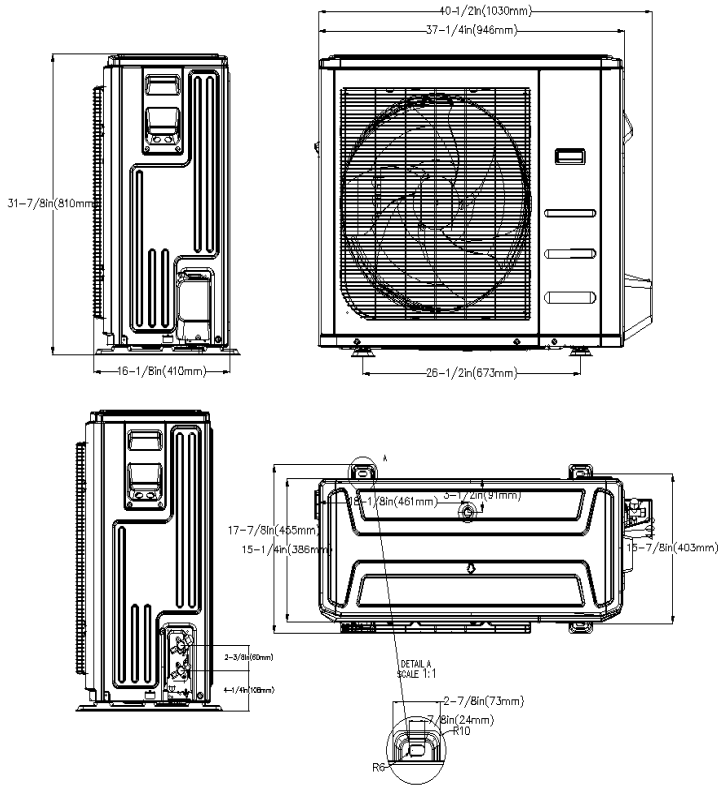

Installation Instruction

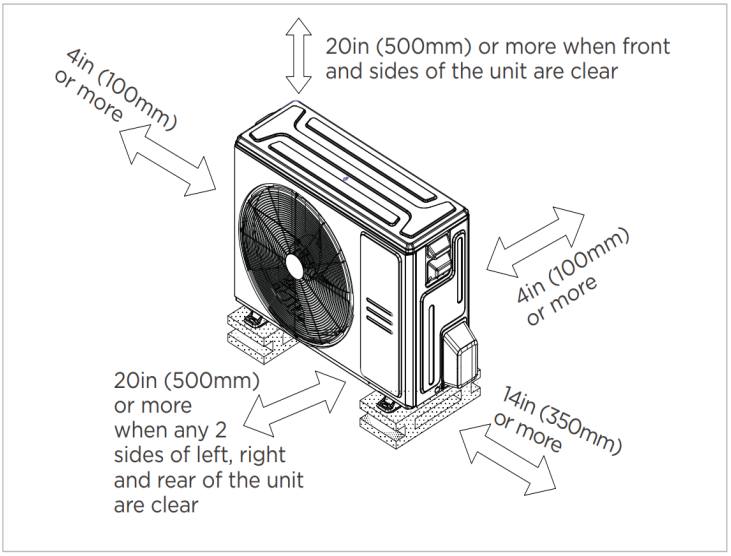

☑ Meets all spatial requirements shown in Installation Clearance Requirements above.

Fan performance

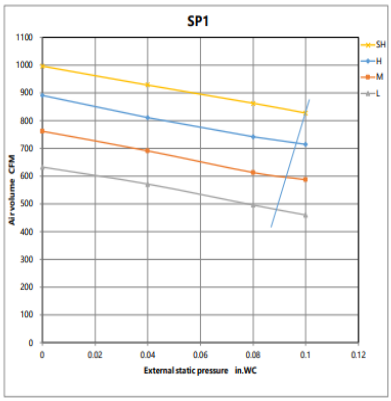

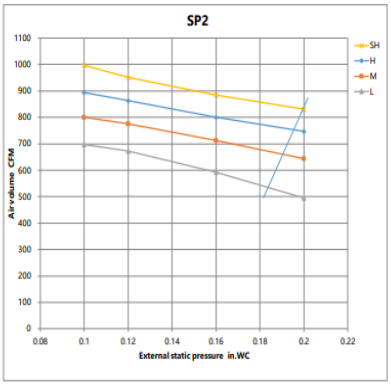

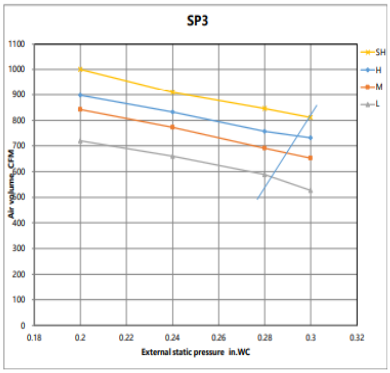

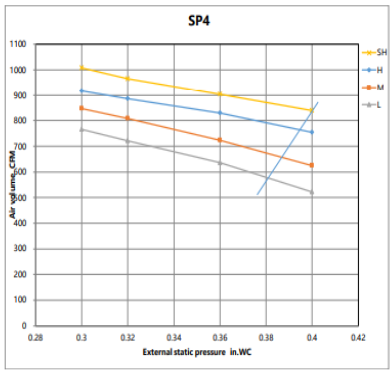

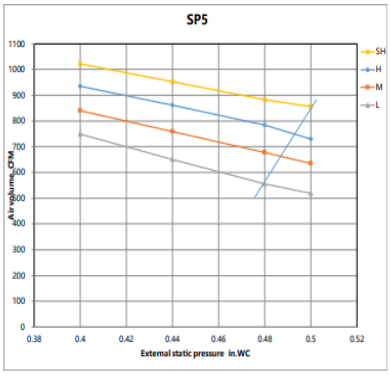

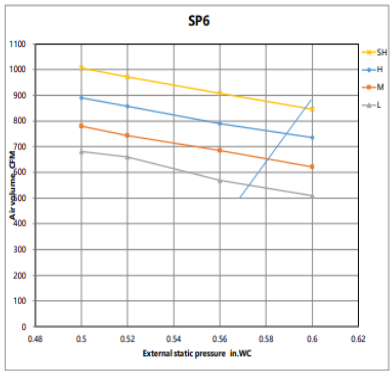

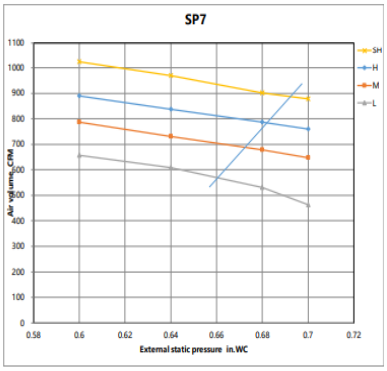

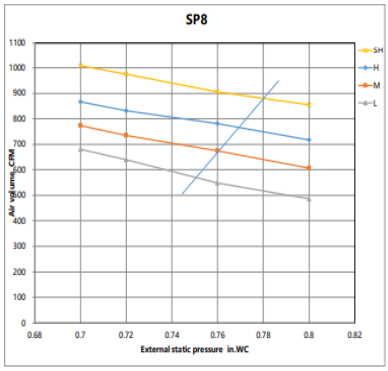

Constant air volume

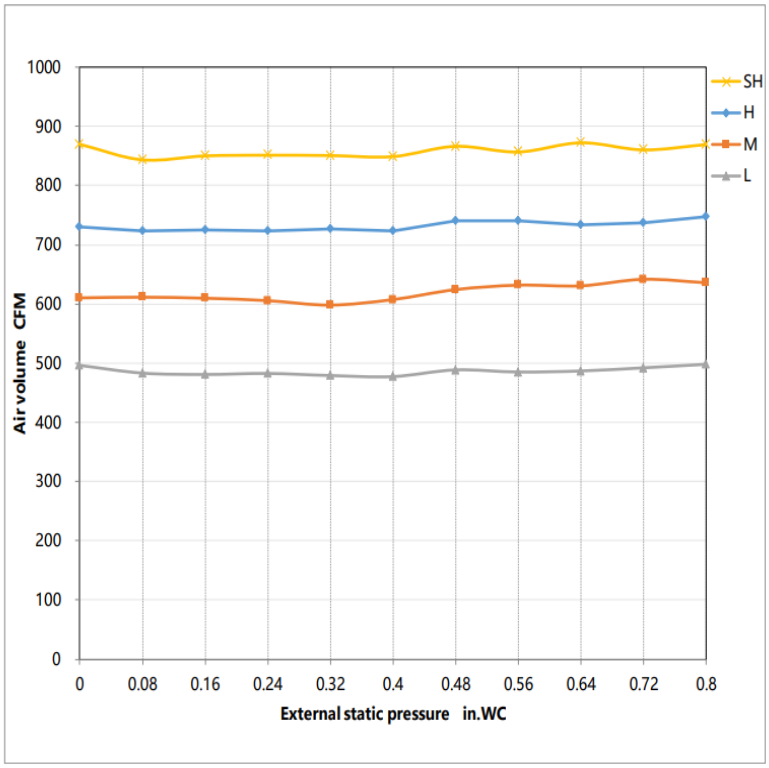

FEATURES

- Compatible with both horizontal and vertical installation
- Static pressure up to 0.8 in.w.g(for all models)
- Static pressure setting stages: 8
- Refrigerant leakage detection sensor
- Constant airflow
- Built-in pump
- i-clean
- Fan speed stages: 1~100%
- WiFi capability: through wired controller with built-in WiFi
- OTA(by using wired controller 120N(X6W))
- 2-pin connector(HA/HB) for programmable wired controller
- Multiple control options available:
  - Two way communication wired controller:120N(X6)
  - Two way communication wired controller with built-in WiFi:120N(X6W)
  - Infrared wired controller: 120L
  - Wireless remote controller
  - Third-Party 24V Thermostat*

*24V interface is required.