SUBMITTAL DATA SHEET

4-Way Cassette Heat Pump System BXS5A12UC0-12CC4	
Location:	Approval:
Engineer:	Date:
Submitted to:	Construction:
Submitted by:	Unit #:
Reference:	Drawing #:

INDOOR SPEINDOOR SPECIFICATIONCIFICATION		
Indoor Air Flow (Turbo/H/M/L/Si) (CFM)		417.9 / 364.9 / 306.1 / 194.2 / 147.2
Indoor Noise Level (Turbo/H/M/L/Si) (dBA)		46/43.5/40.5/27.5/26.00
Dimension (W×D×H)	inch	22.44 x 22.44 x 9.65
	mm	570.0×570.0×245.0
Package (W×D×H)	inch	28.15 x 25.20 x 11.61
	mm	715×640×295
Net/Gross Weight	lbs	35.27/41.89
	kg	16.0/19.0

OUTDOOR SPECIFICATION		
Compressor Type		ROTARY
Compressor Model		KTN110D42UFZ
Refrigerant		R454B
Refrigerant Oil Charge(mL)		350
Refrigerant Oil		VG74
Outdoor Air Flow (Max) (CFM)		1471.5
Outdoor Noise Level (dBA)		57.0
Dimension (W×D×H)	inch	31.69 x 12.99 x 21.81
	mm	805.0×330.0×554.0
Package (W×D×H)	inch	36.02 x 14.57 x 24.21
	mm	915×370×615
Net/Gross Weight	lbs	72.75/78.70
	kg	33/35.7

EFFICIENCY			
Cooling		Heating	
SEER2	22.2	HSPF2-4	11.6
EER2	12.5	COP	3.70

ELECTRICAL	
Power Supply	208/230V,60Hz,1Ph
System MCA	15.00
Connection Wiring	14#x4
System MOCP	15
Compressor RLA	11.6
Outdoor Fan Motor RLA	0.5
Outdoor Fan Motor W	34
Indoor Fan Motor RLA	0.9
Indoor Fan Motor W	45
System Power Input @ Cooling (W)	945(210 ~ 1260)
System Power Input @ Heating (W)	951(285 ~1330)
MCA: Min. circuit amps (A)	**MOCP**: Max. over current protection (A)
RLA: Rated load amps (A)	**W:** Fan motor rated output (W)

PERFORMANCE of Cooling	
Cooling (Btu/hr)	
Rated Capacity	12000
Min/Max Capacity	3800~15100
Moisture Removal(L/h)	1.45
Standard Operating Range(℉/℃)	-22～122(-30～50)
Conditions:	Indoor: 80℉ DB/67℉ WB
	Outdoor: 95℉ DB/75℉ WB

PERFORMANCE of Heating	
Heating (Btu/hr)	
1. @ 47℉ Rated	12000
1. @ 47℉ Min/Max Capacity	5300~16200
2. @ 17℉ Rated	10000
3. @ 5℉ Rated: Capacity / COP	11500/2.00
3. @ 5℉ Max: Capacity	11500
Standard Operating Range(℉/℃)	-22～75(-30～24)
1. Conditions:	Indoor: 70℉ DB/60℉ WB
	Outdoor: 47℉ DB/43℉ WB
2. Conditions:	Indoor: 70℉ DB/60℉ WB
	Outdoor: 17℉ DB/15℉ WB
3. Conditions	Indoor: 70℉ DB/60℉ WB
	Outdoor: 5℉ DB/5℉ WB

PIPING	
Throttle type(Indoor)	N/A
Throttle type(Outdoor)	EXV
Liquid Size	6.35mm(1/4in)
Gas Size	9.52mm(3/8in)
Max. Piping Length(ft/m)	82.00(25)
Max. Height Difference(ft/m)	49.20(15)
Max. Pre-charged Length(ft/m)	24.6(7.5)
Refrigerant Pre-charged Amount(oz/kg)	35.27(1.00)
Additional Charge of Refrigerant((oz/ft)/(g/m))	0.16(15)
Connection Method	Flared

Indoor Unit Dimension

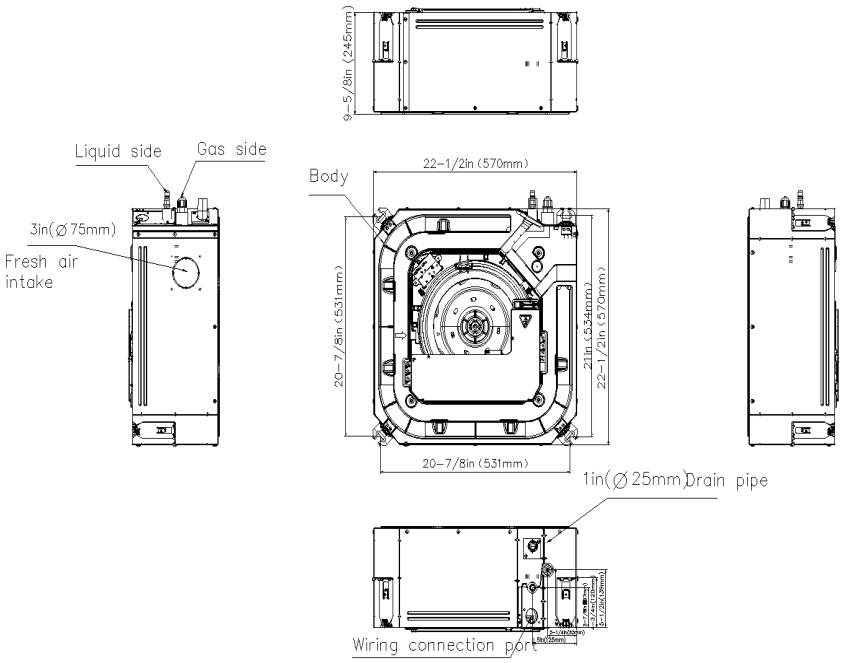

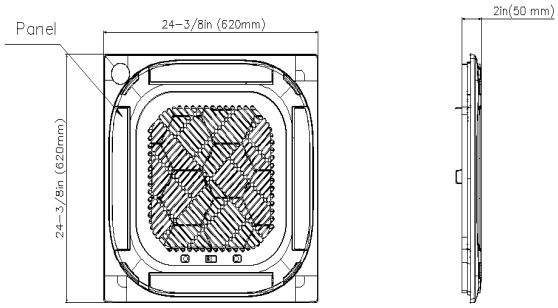

Installation Instruction

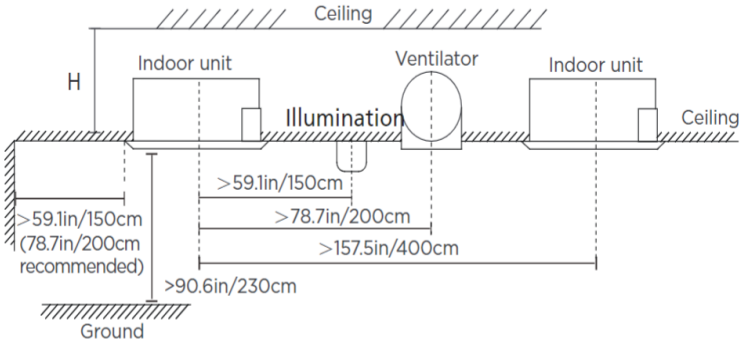

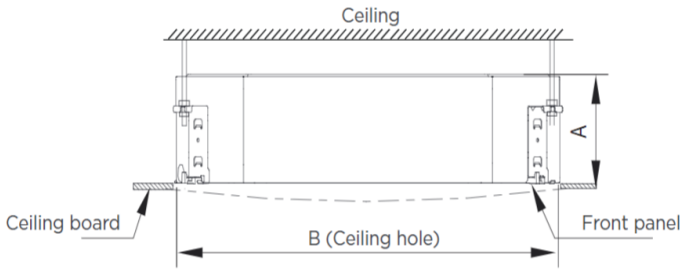

Distance from ceiling relative to height of indoor unit

MODEL	Length of A	Length of H	Length of B
9K/12K/18K	9.6in (245mm)	>10.8in (275mm)	23.6in (600mm)
24K	8.03in (205mm)	9.06in (230mm)	35.4in (900mm)
36K	9.65in (245mm)	10.7in (271mm)	
48K	11.3in (287mm)	12.3in (313mm)	

Outdoor Unit Dimension

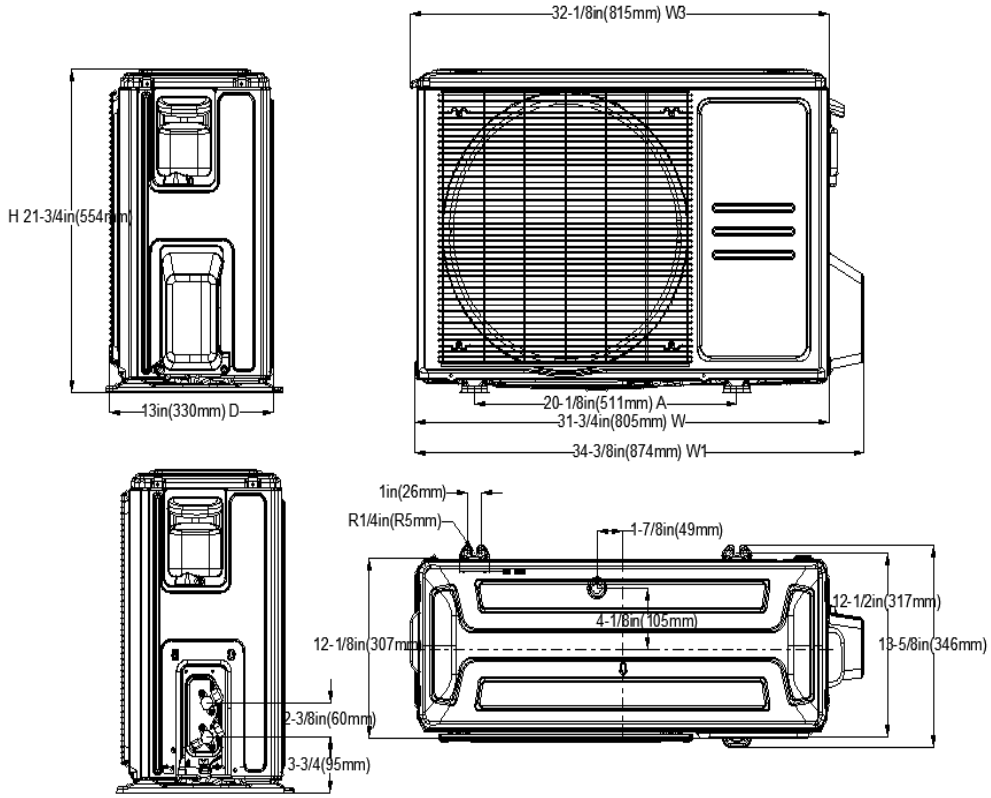

Installation Instruction

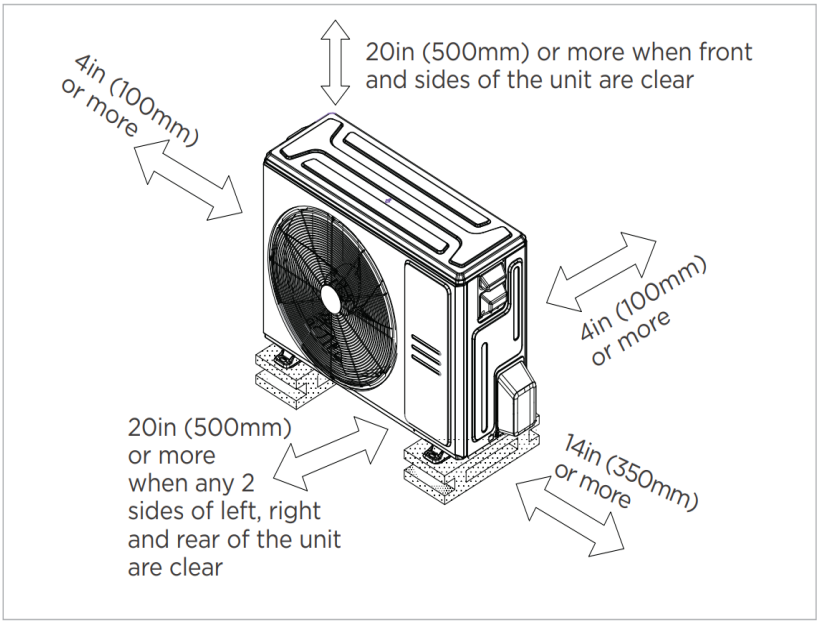

☑ Meets all spatial requirements shown in Installation Clearance Requirements above.

FEATURES

- 360° Air Flow
- Remote on-off and alarm ports
- Refrigerant leakage detection sensor(Optional)
- Humidity sensor
- Built-in pump
- 1~100% fan speed setting
- WiFi capability: through WiFi dongle or wired controller with built-in WiFi
- OTA(by using WiFi dongle)
- 2-pin connector(HA/HB) for programmable wired controller
- Multiple control options available:
  - Two way communication wired controller:120N(X6)
  - Two way communication wired controller with built-in WiFi:120N(X6W)
  - Infrared wired controller: 120L
  - Wireless remote controller
  - Third-Party 24V Thermostat*

*24V interface is required.