SUBMITTAL DATA SHEET

Slim Duct Heat Pump System BXS5A12UC0-12CDH	
Location:	Approval:
Engineer:	Date:
Submitted to:	Construction:
Submitted by:	Unit #:
Reference:	Drawing #:

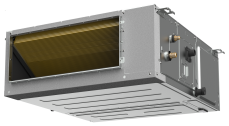

INDOOR SPECIFICATION		
Indoor Air Flow (Turbo/H/M/L/Si) (CFM)		419.1 / 350.2 / 256.0 / 216.0 / 135.4
Indoor Noise Level (Turbo/H/M/L/Si) (dBA)		N\A/32.5/30.5/28.5/26
Indoor static pressure range(in.w.g.)		0-0.8
Dimension (W×D×H)	inch	27.56 x 29.53 x 9.65
	mm	700.0×750.0×245.0
Package (W×D×H)	inch	36.42 x 33.46 x 11.73
	mm	925×850×298
Net/Gross Weight	lbs	64.15/73.85
	kg	29.1/33.5

OUTDOOR SPECIFICATION		
Compressor Type		ROTARY
Compressor Model		KTN110D42UFZ
Refrigerant		R454B
Refrigerant Oil Charge(mL)		350
Refrigerant Oil		6.0
Outdoor Air Flow (Max) (CFM)		1471.5
Outdoor Noise Level (dBA)		54.0
Dimension (W×D×H)	inch	31.69 x 12.99 x 21.81
	mm	805.0×330.0×554.0
Package (W×D×H)	inch	36.02 x 14.57 x 24.21
	mm	915×370×615
Net/Gross Weight	lbs	72.75/78.70
	kg	33/35.7

EFFICIENCY			
Cooling		Heating	
SEER2	20	HSPF2-4	10.6
EER2	12.0	COP	3.63

PERFORMANCE of Cooling	
Cooling (Btu/hr)	
Rated Capacity	12000
Min/Max Capacity	3000~13300
Moisture Removal(L/h)	1.39
Standard Operating Range(℉/℃)	-22～122(-30～50)
Conditions:	Indoor: 80℉ DB/67℉ WB
	Outdoor: 95℉ DB/75℉ WB

PERFORMANCE of Heating	
Heating (Btu/hr)	
1. @ 47℉ Rated	12000
1. @ 47℉ Min/Max Capacity	3900~16500
2. @ 17℉ Rated	10200
3. @ 5℉ Rated: Capacity / COP	12000/1.95
3. @ 5℉ Max: Capacity	12000
Standard Operating Range(℉/℃)	-22～75(-30～24)
1. Conditions:	Indoor: 70℉ DB/60℉ WB
	Outdoor: 47℉ DB/43℉ WB
2. Conditions:	Indoor: 70℉ DB/60℉ WB
	Outdoor: 17℉ DB/15℉ WB
3. Conditions	Indoor: 70℉ DB/60℉ WB
	Outdoor: 5℉ DB/5℉ WB

ELECTRICAL	
Power Supply	208/230V,60Hz,1Ph
System MCA	15.00
Connection Wiring	14#x4
System MOCP	15
Compressor RLA	11.6
Outdoor Fan Motor RLA	0.5
Outdoor Fan Motor W	34
Indoor Fan Motor RLA	1.5
Indoor Fan Motor W	165
System Power Input @ Cooling (W)	1000(150 ~ 1260)
System Power Input @ Heating (W)	970(260 ~1420)
MCA: Min. circuit amps (A)	**MOCP**: Max. over current protection (A)
RLA: Rated load amps (A)	**W:** Fan motor rated output (W)

PIPING	
Throttle type(Indoor)	N/A
Throttle type(Outdoor)	EXV
Liquid Size	6.35mm(1/4in)
Gas Size	9.52mm(3/8in)
Max. Piping Length(ft/m)	82.00(25)
Max. Height Difference(ft/m)	49.20(15)
Max. Pre-charged Length(ft/m)	24.6(7.5)
Refrigerant Pre-charged Amount(oz/kg)	35.27(1.00)
Additional Charge of Refrigerant((oz/ft)/(g/m))	0.16(15)
Connection Method	Flared

Indoor Unit Dimension

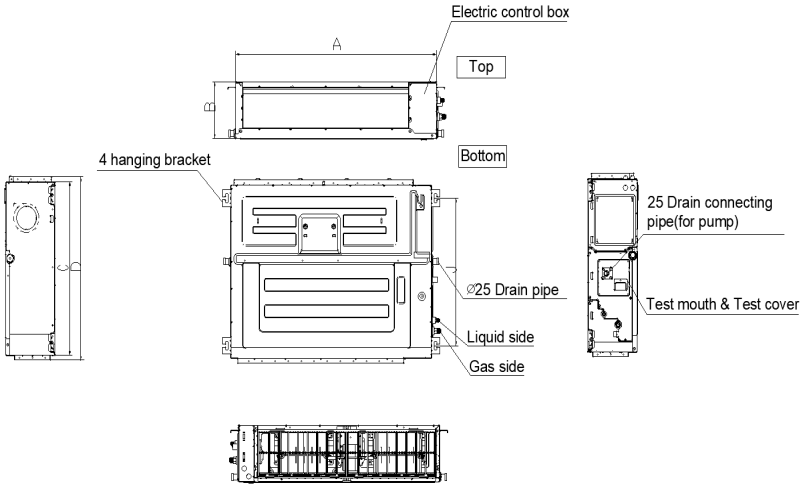

MODEL	A	B	C	D
9K	27-1/2in(700mm)	7-7/8in(200mm)	17-3/4(450mm)	20in(506mm)
12K	27-1/2in(700mm)	9-5/8in(245mm)	29-1/2(750mm)	31-1/4in(795mm)
18K~24K	39-3/8in(1000mm)	9-5/8in(245mm)	29-1/2(750mm)	31-1/4in(795mm)
36K~48K	47-1/8in(1200mm)	11-7/8in(300mm)	29-1/2(750mm)	31-1/4in(795mm)
60K	55-1/8in(1400mm)	15in(380mm)	31-1/2in(800mm)	33-1/4in(845mm)

Installation Instruction

Installation place

The distance between the mounted indoor unit should meet the specifications illlustrated in the following diagram.

1) Ceiling-mounted

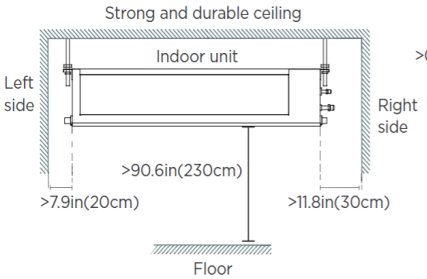

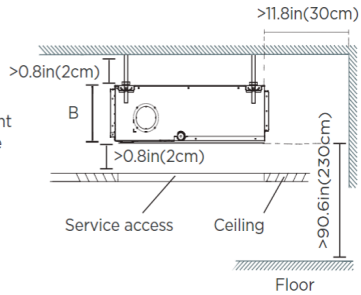

2) Wall-mounted

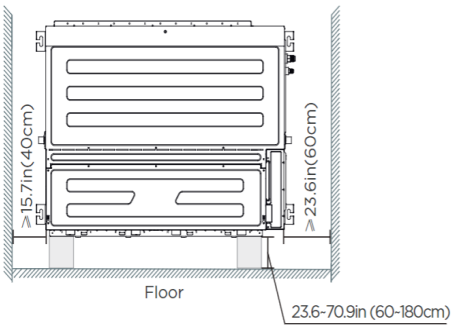

Outdoor Unit Dimension

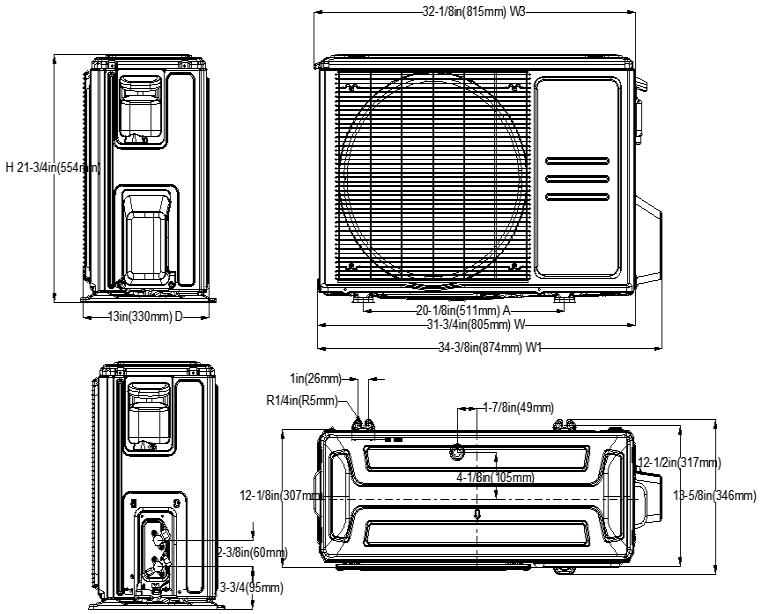

Installation Instruction

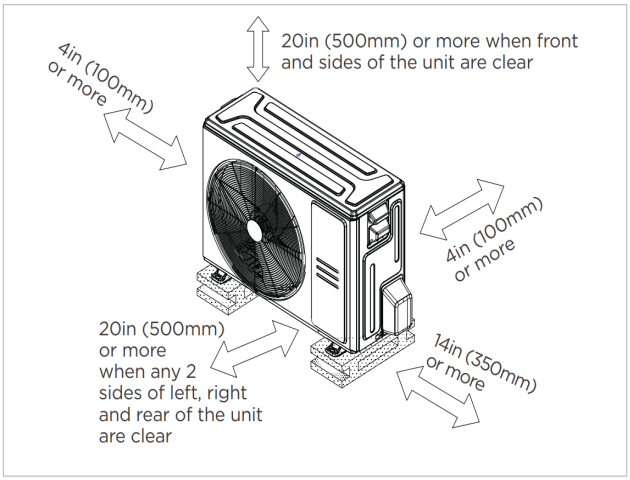

☑ Meets all spatial requirements shown in Installation Clearance Requirements above.

Fan performance

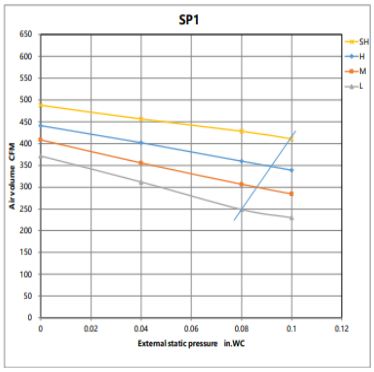

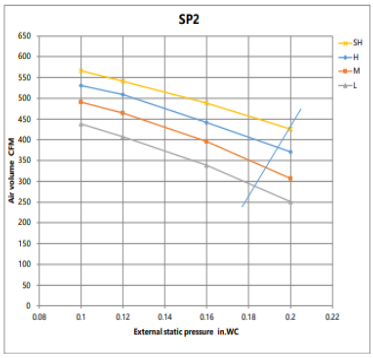

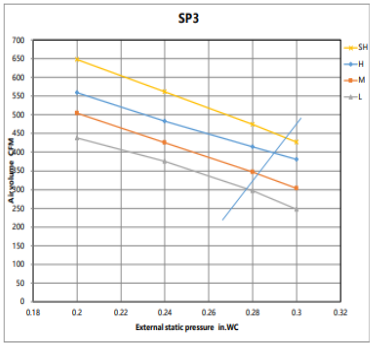

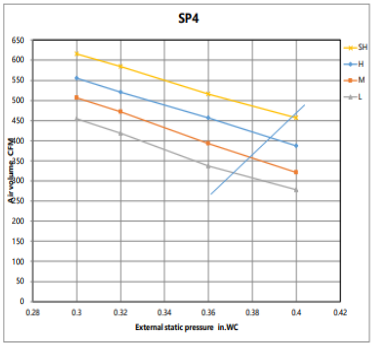

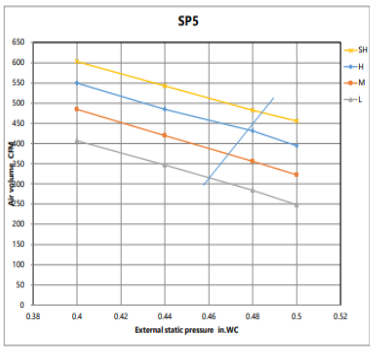

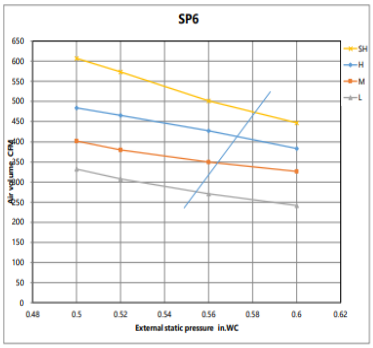

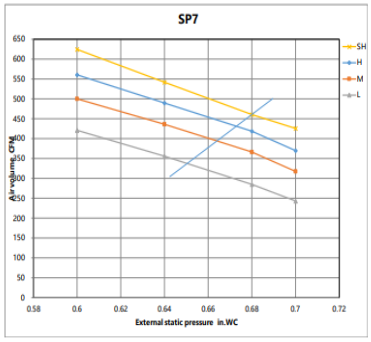

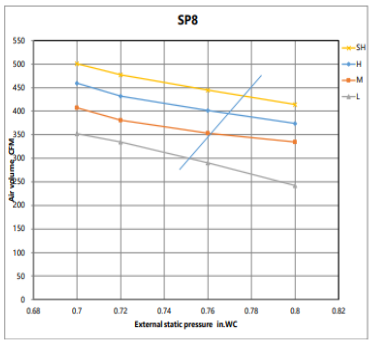

Constant air volume

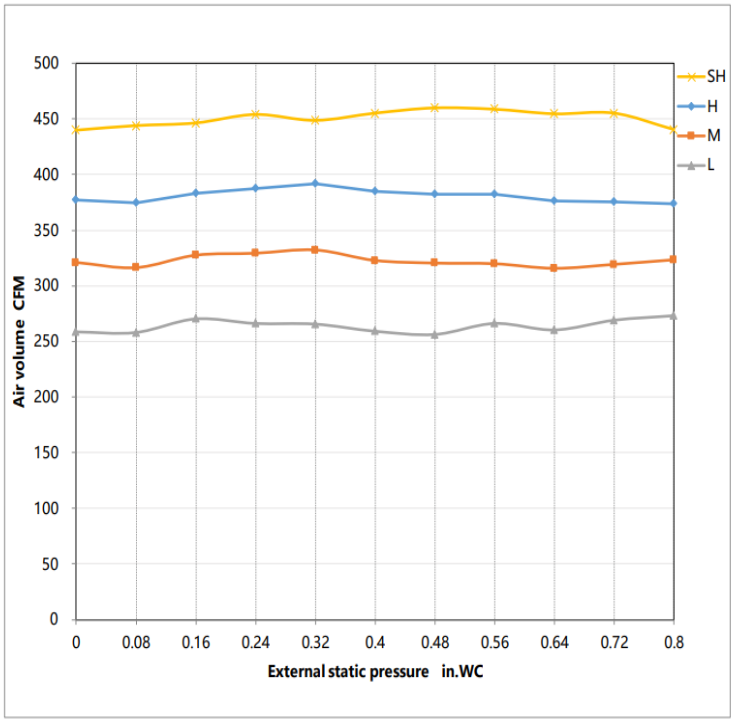

FEATURES

- Compatible with both horizontal and vertical installation
- Static pressure up to 0.8 in.w.g(for all models)
- Static pressure setting stages: 8
- Refrigerant leakage detection sensor
- Constant airflow
- Built-in pump
- i-clean
- Fan speed stages: 1~100%
- WiFi capability: through wired controller with built-in WiFi
- OTA(by using wired controller 120N(X6W))
- 2-pin connector(HA/HB) for programmable wired controller
- Multiple control options available:
  - Two way communication wired controller:120N(X6)
  - Two way communication wired controller with built-in WiFi:120N(X6W)
  - Infrared wired controller: 120L
  - Wireless remote controller
  - Third-Party 24V Thermostat*

*24V interface is required.