SUBMITTAL DATA SHEET

4-Way Cassette Heat Pump System BXS5A24UC0-24CC4	
Location:	Approval:
Engineer:	Date:
Submitted to:	Construction:
Submitted by:	Unit #:
Reference:	Drawing #:

INDOOR SPECIFICATION		
Indoor Air Flow (Turbo/H/M/L/Si) (CFM)		765.2 / 706.3 / 635.7 / 547.4 / N/A
Indoor Noise Level (Turbo/H/M/L/Si) (dBA)		48.5/45.0/42.5/33.5/N/A
Dimension (W×D×H)	inch	32.68 x 32.68 x 8.07
	mm	830.0×830.0×205.0
Package (W×D×H)	inch	35.83 x 35.83 x 9.84
	mm	910×910×250
Net/Gross Weight	lbs	47.18/59.08
	kg	21.4/26.8

OUTDOOR SPECIFICATION		
Compressor Type		ROTARY
Compressor Model		KTM240D46UKT2
Refrigerant		R454B
Refrigerant Oil Charge(mL)		620
Refrigerant Oil		VG74
Outdoor Air Flow (Max) (CFM)		2236.7
Outdoor Noise Level (dBA)		61.5
Dimension (W×D×H)	inch	37.24 x 16.14 x 31.89
	mm	946.0×410.0×810.0
Package (W×D×H)	inch	42.91 x 19.68 x 34.84
	mm	1090×500×885
Net/Gross Weight	lbs	130.29/141.31
	kg	59.1/64.1

EFFICIENCY			
Cooling		Heating	
SEER2	20.7	HSPF2-4	11.6
EER2	12.0	COP	3.54

ELECTRICAL	
Power Supply	208/230V,60Hz,1Ph
System MCA	24.90
Connection Wiring	14#x4
System MOCP	25
Compressor RLA	15.0
Outdoor Fan Motor RLA	1.3
Outdoor Fan Motor W	120
Indoor Fan Motor RLA	1.0
Indoor Fan Motor W	45
System Power Input @ Cooling (W)	1950(960 ~ 2300)
System Power Input @ Heating (W)	2070(695 ~2490)
MCA: Min. circuit amps (A)	**MOCP**: Max. over current protection (A)
RLA: Rated load amps (A)	**W:** Fan motor rated output (W)

PERFORMANCE of Cooling	
Cooling (Btu/hr)	
Rated Capacity	23400
Min/Max Capacity	12800~26200
Moisture Removal(L/h)	2.36
Standard Operating Range(℉/℃)	-22～122(-30～50)
Conditions:	Indoor: 80℉ DB/67℉ WB
	Outdoor: 95℉ DB/75℉ WB

PERFORMANCE of Heating	
Heating (Btu/hr)	
1. @ 47℉ Rated	25000
1. @ 47℉ Min/Max Capacity	11500~30700
2. @ 17℉ Rated	20400
3. @ 5℉ Rated: Capacity / COP	23800/2.23
3. @ 5℉ Max: Capacity	23800
Standard Operating Range(℉/℃)	-22～75(-30～24)
1. Conditions:	Indoor: 70℉ DB/60℉ WB
	Outdoor: 47℉ DB/43℉ WB
2. Conditions:	Indoor: 70℉ DB/60℉ WB
	Outdoor: 17℉ DB/15℉ WB
3. Conditions	Indoor: 70℉ DB/60℉ WB
	Outdoor: 5℉ DB/5℉ WB

PIPING	
Throttle type(Indoor)	N/A
Throttle type(Outdoor)	EXV+Throttle valve
Liquid Size	9.52mm(3/8in)
Gas Size	15.9mm(5/8in)
Max. Piping Length(ft/m)	164.00(50)
Max. Height Difference(ft/m)	82.00(25)
Max. Pre-charged Length(ft/m)	24.6(7.5)
Refrigerant Pre-charged Amount(oz/kg)	63.49(1.80)
Additional Charge of Refrigerant((oz/ft)/(g/m))	0.32(30)
Connection Method	Flared

Indoor Unit Dimension

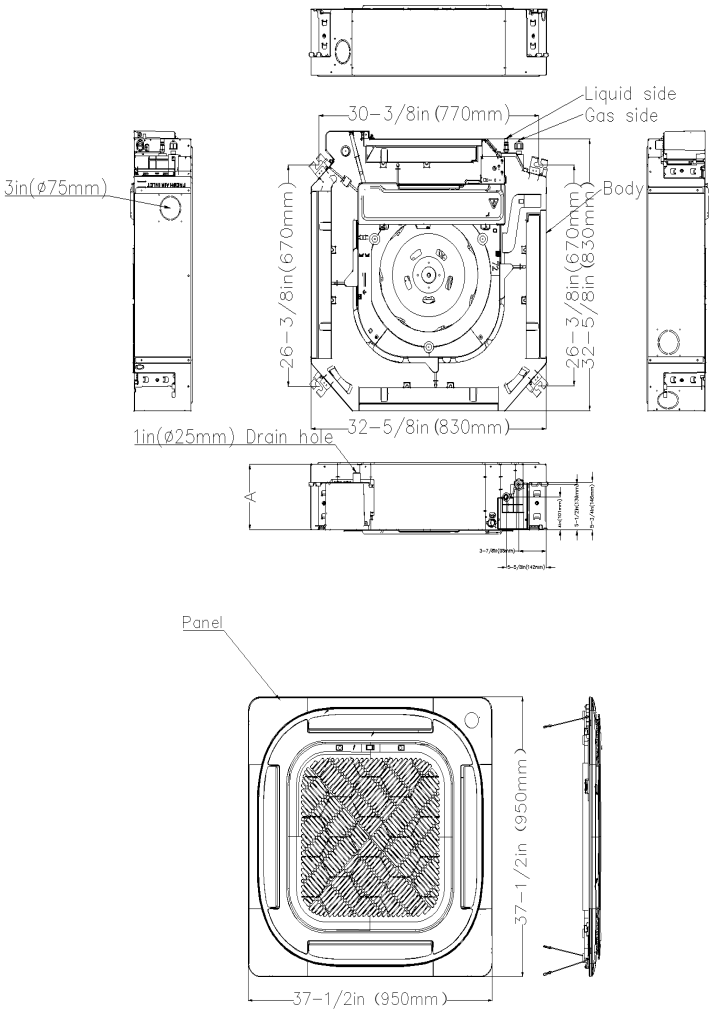

Installation Instruction

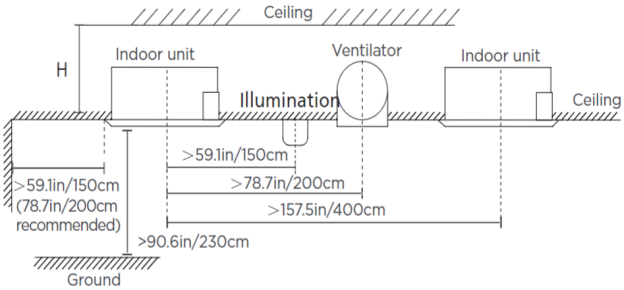

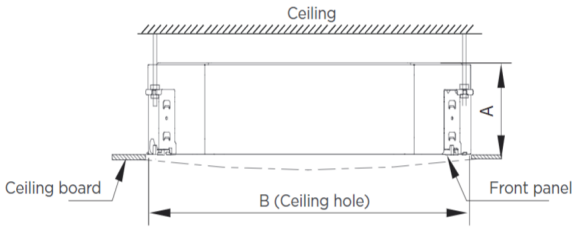

Distance from ceiling relative to height of indoor unit

MODEL	Length of A	Length of H	Length of B
9K/12K/18K	9.6in (245mm)	>10.8in (275mm)	23.6in (600mm)
24K	8.03in (205mm)	9.06in (230mm)	35.4in (900mm)
36K	9.65in (245mm)	10.7in (271mm)	
48K	11.3in (287mm)	12.3in (313mm)	

Outdoor Unit Dimension

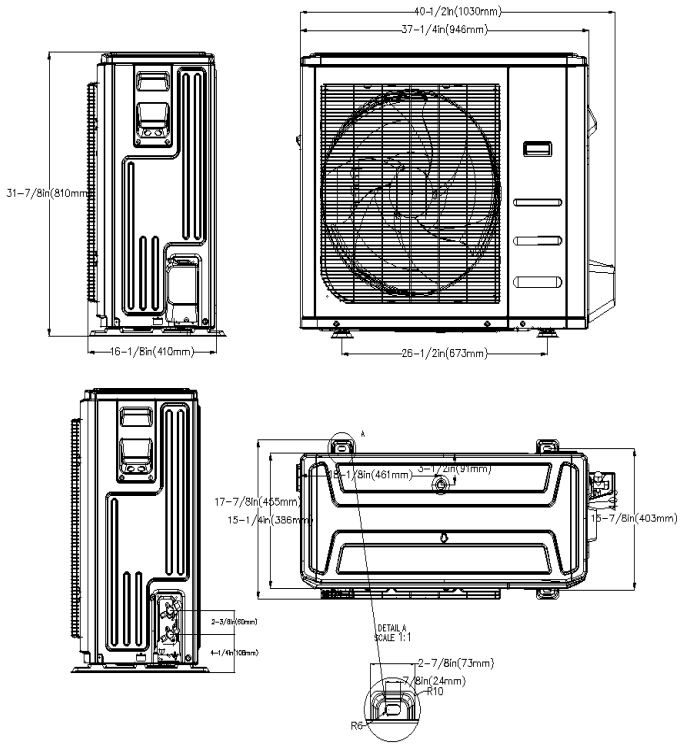

Installation Instruction

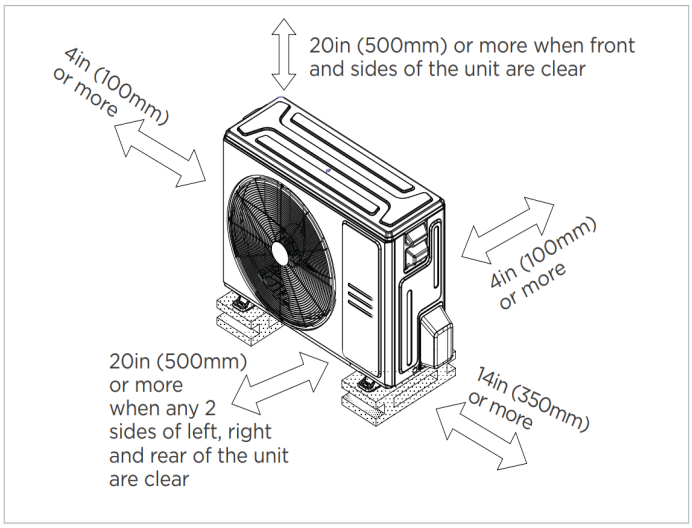

☑ Meets all spatial requirements shown in Installation Clearance Requirements above.

FEATURES

- 360° Air Flow
- Remote on-off and alarm ports
- Refrigerant leakage detection sensor(Optional)
- Humidity sensor
- Built-in pump
- 1~100% fan speed setting
- WiFi capability: through WiFi dongle or wired controller with built-in WiFi
- OTA(by using WiFi dongle)
- 2-pin connector(HA/HB) for programmable wired controller
- Multiple control options available:
  - Two way communication wired controller:120N(X6)
  - Two way communication wired controller with built-in WiFi:120N(X6W)
  - Infrared wired controller: 120L
  - Wireless remote controller
  - Third-Party 24V Thermostat*

*24V interface is required.