SUBMITTAL DATA SHEET

Ceiling&Floor Heat Pump System BXS5A24UC0-24FC0	
Location:	Approval:
Engineer:	Date:
Submitted to:	Construction:
Submitted by:	Unit #:
Reference:	Drawing #:

INDOOR SPECIFICATION		
Indoor Air Flow (Turbo/H/M/L/Si) (CFM)		735.8 / 706.3 / 606.3 / 453.2 / 376.7
Indoor Noise Level (Turbo/H/M/L/Si) (dBA)		51.5/49.0/45.0/34.0/29.0
Dimension (W×D×H)	inch	42.05 x 26.57 x 9.25
	mm	1068.0×675.0×235.0
Package (W×D×H)	inch	45.08 x 29.72 x 12.52
	mm	1145×755×318
Net/Gross Weight	lbs	61.29/73.19
	kg	27.8/33.2

OUTDOOR SPECIFICATION		
Compressor Type		ROTARY
Compressor Model		KTM240D46UKT2
Refrigerant		R454B
Refrigerant Oil Charge(mL)		620
Refrigerant Oil		VG74
Outdoor Air Flow (Max) (CFM)		2236.7
Outdoor Noise Level (dBA)		61.5
Dimension (W×D×H)	inch	37.24 x 16.14 x 31.89
	mm	946.0×410.0×810.0
Package (W×D×H)	inch	42.91 x 19.68 x 34.84
	mm	1090×500×885
Net/Gross Weight	lbs	130.29/141.31
	kg	59.1/64.1

EFFICIENCY			
Cooling		Heating	
SEER2	20.4	HSPF2-4	12.1
EER2	12.0	COP	3.34

ELECTRICAL	
Power Supply	208/230V,60Hz,1Ph
System MCA	24.90
Connection Wiring	14#x4
System MOCP	25
Compressor RLA	15.0
Outdoor Fan Motor RLA	1.3
Outdoor Fan Motor W	120
Indoor Fan Motor RLA	1.0
Indoor Fan Motor W	90
System Power Input @ Cooling (W)	1833(980 ~ 2300)
System Power Input @ Heating (W)	2194(630 ~2570)
MCA: Min. circuit amps (A)	**MOCP**: Max. over current protection (A)
RLA: Rated load amps (A)	**W:** Fan motor rated output (W)

PERFORMANCE of Cooling	
Cooling (Btu/hr)	
Rated Capacity	22000
Min/Max Capacity	12700~25600
Moisture Removal(L/h)	2.73
Standard Operating Range(℉/℃)	-22～122(-30～50)
Conditions:	Indoor: 80℉ DB/67℉ WB
	Outdoor: 95℉ DB/75℉ WB

PERFORMANCE of Heating	
Heating (Btu/hr)	
1. @ 47℉ Rated	26000
1. @ 47℉ Min/Max Capacity	11300~29500
2. @ 17℉ Rated	20200
3. @ 5℉ Rated: Capacity / COP	24200/2.16
3. @ 5℉ Max: Capacity	24200
Standard Operating Range(℉/℃)	-22～75(-30～24)
1. Conditions:	Indoor: 70℉ DB/60℉ WB
	Outdoor: 47℉ DB/43℉ WB
2. Conditions:	Indoor: 70℉ DB/60℉ WB
	Outdoor: 17℉ DB/15℉ WB
3. Conditions	Indoor: 70℉ DB/60℉ WB
	Outdoor: 5℉ DB/5℉ WB

PIPING	
Throttle type(Indoor)	N/A
Throttle type(Outdoor)	EXV+Throttle valve
Liquid Size	9.52mm(3/8in)
Gas Size	15.9mm(5/8in)
Max. Piping Length(ft/m)	164.00(50)
Max. Height Difference(ft/m)	82.00(25)
Max. Pre-charged Length(ft/m)	24.6(7.5)
Refrigerant Pre-charged Amount(oz/kg)	63.49(1.80)
Additional Charge of Refrigerant((oz/ft)/(g/m))	0.32(30)
Connection Method	Flared

Indoor Unit Dimension

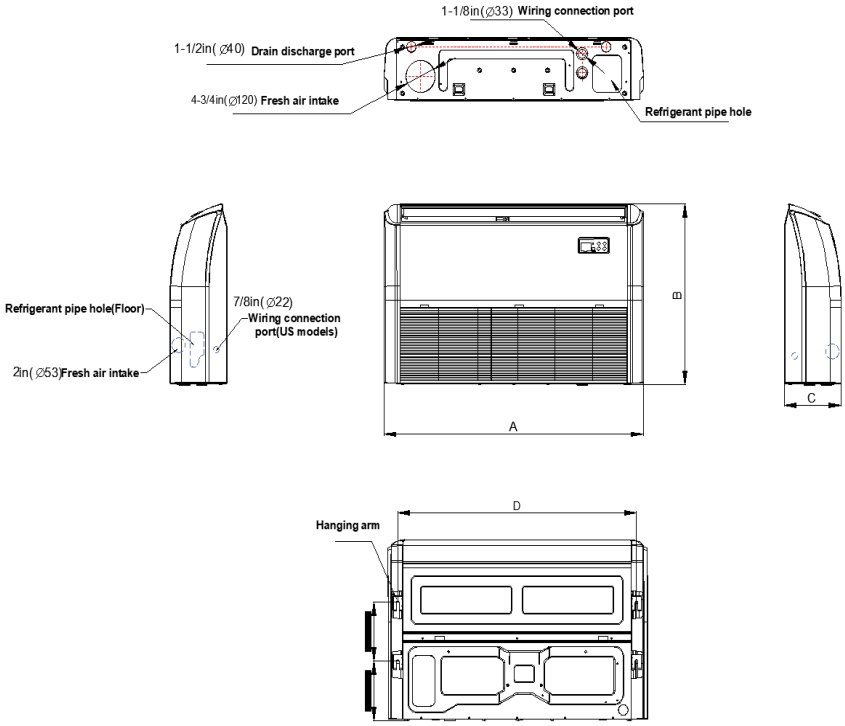

Model	A	B	C	D
18K/24K	42in(1068mm)	26-1/2in(675mm)	9-1/4in(235mm)	38-3/4in(983mm)
36K/48K/60K	65in(1650mm)	26-1/2in(675mm)	9-1/4in(235mm)	61-5/8in(1565mm)

Installation Instruction

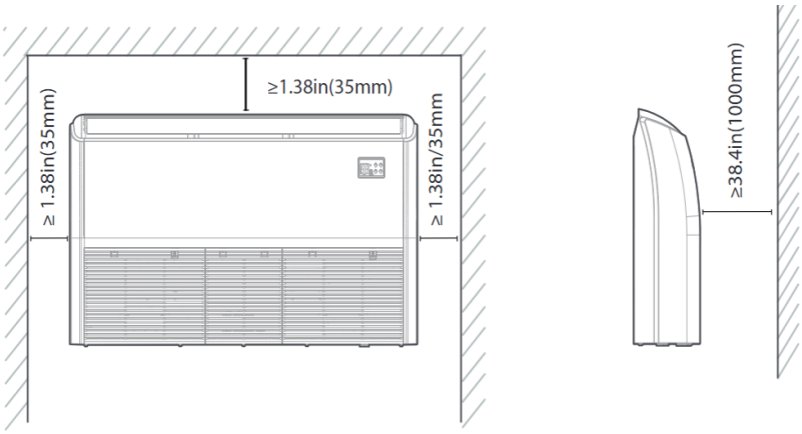

Outdoor Unit Dimension

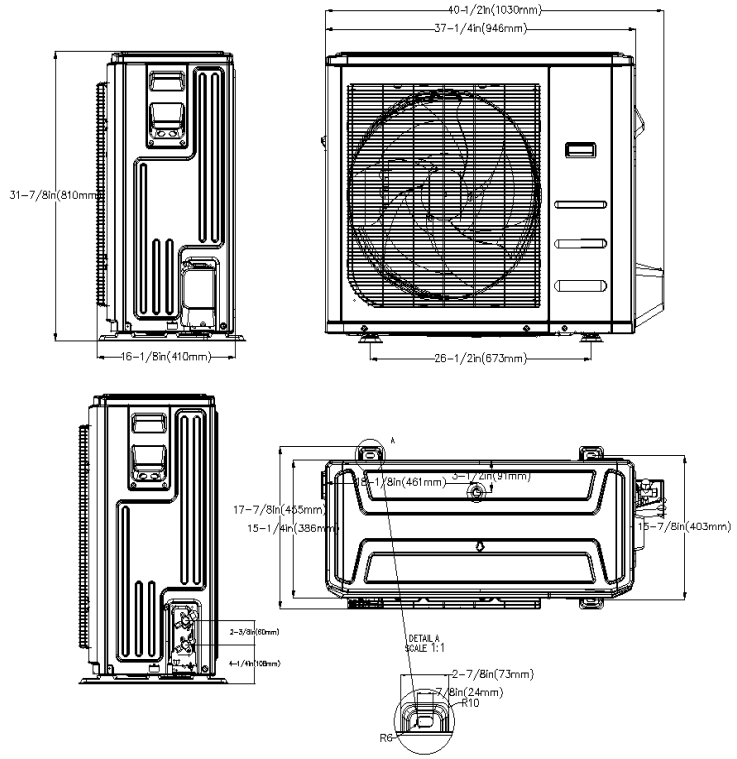

Installation Instruction

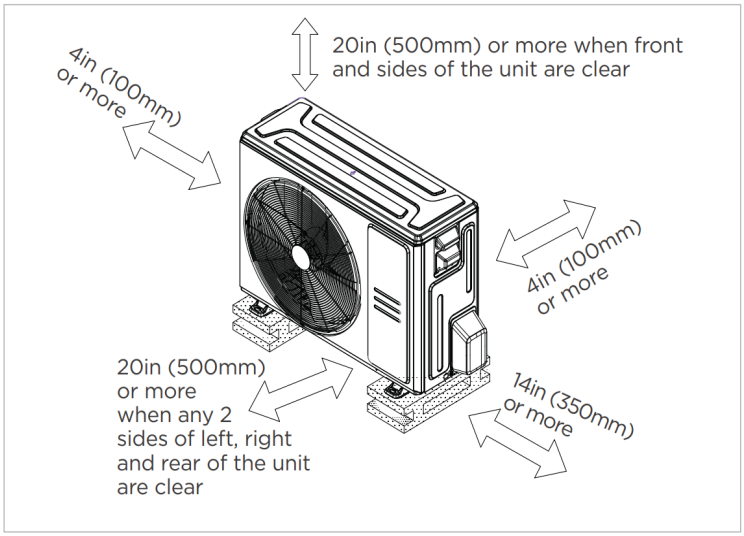

☑ Meets all spatial requirements shown in Installation Clearance Requirements above.

FEATURES

- 2 Style Installation
- 3D Airflow
- Refrigerant leakage detection sensor
- Humidity sensor
- “88” display tube
- 1~100% fan speed setting
- WiFi capability: through WiFi dongle or wired controller with built-in WiFi
- OTA(by using WiFi dongle)
- 2-pin connector(HA/HB) for programmable wired controller
- Multiple control options available:
  - Two way communication wired controller:120N(X6)
  - Two way communication wired controller with built-in WiFi:120N(X6W)
  - Infrared wired controller: 120L
  - Wireless remote controller
  - Third-Party 24V Thermostat*

*24V interface is required.