Blueridge Ultra Efficient

Whole House Ducted

Inverter Heat pump and

Air handler System

Installation Instructions

10/18/2022

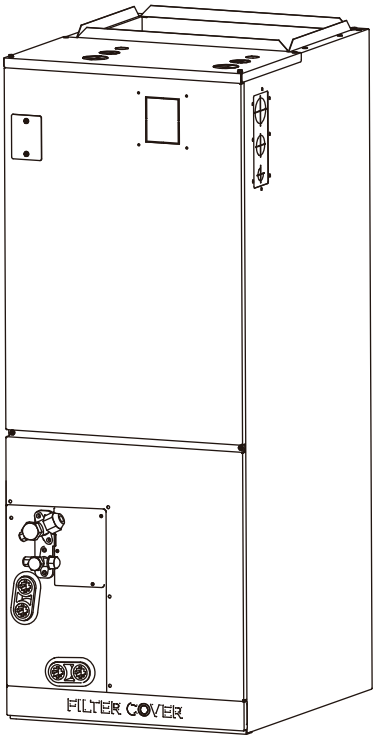

AIR-HANDLER AIR CONDITIONERS

Installation Manual

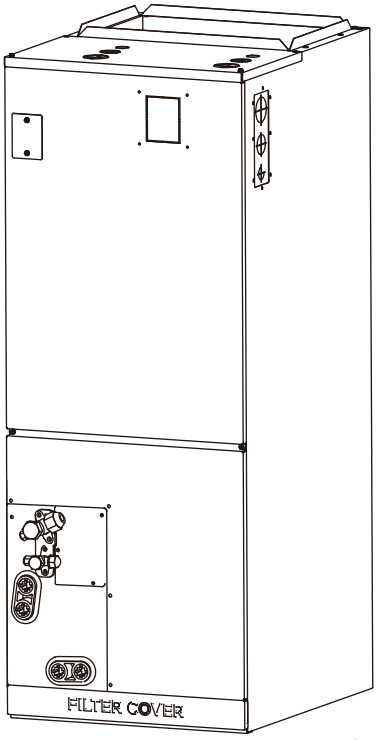

IMPORTANT NOTE:

Read this manual carefully before installing or operating your new air conditioning unit. Make sure to save this manual for future reference.

Table of Contents

SAFETY PRECAUTION.....04
ACCESSORIES.....08
INDOOR UNIT INSTALLATION 09
OUTDOOR UNIT INSTALLATION 28
WIRING 31
AIR EVACUATION 44
TEST RUN 46

Read This Manual

Inside you'll find many helpful hints on how to use and maintain your air conditioner properly. Just a little preventive care on your part can save you a great deal of time and money over the life of your air conditioner. These instructions may not cover every possible condition of use, so common sense and attention to safety is required when installing, operating and maintaining this product.

WARNING

This appliance can be used by children aged from 8 years and above and persons with reduced physical, sensory or mental capabilities or lack of experience and knowledge if they have been given supervision or instruction concerning use of the appliance in a safe way and understand the hazards involved. Children shall not play with the appliance. Cleaning and user maintenance shall not be made by children without supervision.

This appliance is not intended for use by persons(including children) with reduced physical, sensory or mental capabilities, or lack of experience and knowledge, unless they have been given supervision or instruction concerning use of the appliance by a person responsible for their safety. Children should be supervised to ensure that they do not play with the appliance.

SAFETY PRECAUTIONS

To prevent injury to the user or other people and property damage, the instructions shown here must be followed. Incorrect operation due to ignoring of instructions may cause harm or damage. The level of risk is shown by the following indications.

WARNING	CAUTION	NOTICE
This symbol indicates the possibility of personnel injury or loss of life.	This symbol indicates the possibility of property damage or serious consequences.	This symbol addresses practices not related to physical injury.

WARNINGS FOR PRODUCT USE

- If an abnormal situation arises (like a burning smell), immediately turn off the unit and disconnect the power. Call your dealer for instructions to avoid electric shock, fire or injury.
- **Do not** insert fingers, rods or other objects into the air inlet or outlet. This may cause injury, since the fan may be rotating at high speeds.
- **Do not** use flammable sprays such as hair spray, lacquer or paint near the unit. This may cause fire or combustion.
- **Do not** operate the air conditioner in places near or around combustible gases. Emitted gas may collect around the unit and cause explosion.
- **Do not** operate your air conditioner in a wet room such as a bathroom or laundry room. Too much exposure to water can cause electrical components to short circuit.
- **Do not** expose your body directly to cool air for a prolonged period of time.
- **Do not** allow children to play with the air conditioner. Children must be supervised around the unit at all times.
- If the air conditioner is used together with burners or other heating devices, thoroughly ventilate the room to avoid oxygen deficiency and carbon monoxide build up.
- In certain environments, such as kitchens, server rooms, etc., the use of specially designed air-conditioning units is highly recommended.
- Improper installation, adjustment, alteration, service or maintenance can cause property damage, personal injury or loss of life. Installation and service must be performed by a licensed professional HVAC installer or equivalent, service agency, or the gas supplier.

WARNING FOR CLEANING AND MAINTENANCE

- Turn off the device and disconnect the power before cleaning. Failure to do so can cause electrical shock.
- **Do not** clean the air conditioner with excessive amounts of water.
- **Do not** clean the air conditioner with combustible cleaning agents. Combustible cleaning agents can cause fire or deformation.

CAUTION

- Turn off the air conditioner and disconnect the power if you are not going to use it for a long time.
- Turn off and unplug the unit during storms.
- Make sure that water condensation can drain unhindered from the unit.
- **Do not** operate the air conditioner with wet hands. This may cause electric shock.
- **Do not** use device for any other purpose than its intended use.
- **Do not** climb onto or place objects on top of the outdoor unit.
- **Do not** allow the air conditioner to operate for long periods of time with doors or windows open, or if the humidity is very high.
- As with any mechanical equipment, contact with sharp sheet metal edges can result in personal injury. Take care while handling this equipment and wear gloves and protective clothing.

ELECTRICAL WARNINGS

- Only use the specified power cord. If the power cord is damaged, it must be replaced by the manufacturer, its service agent or similarly qualified persons in order to avoid a hazard.
- Keep power plug clean. Remove any dust or grime that accumulates on or around the plug. Dirty plugs can cause fire or electric shock.
- **Do not** pull power cord to unplug unit. Hold the plug firmly and pull it from the outlet. Pulling directly on the cord can damage it, which can lead to fire or electric shock.
- **Do not** modify the length of the power supply cord or use an extension cord to power the unit.
- **Do not** share the electrical outlet with other appliances. Improper or insufficient power supply can cause fire or electrical shock.
- The product must be properly grounded at the time of installation, or electrical shock may occur.
- For all electrical work, follow all local and national wiring standards, regulations, and the Installation Manual. Connect cables tightly, and clamp them securely to prevent external forces from damaging the terminal. Improper electrical connections can overheat and cause fire, and may also cause shock. All electrical connections must be made according to the Electrical Connection Diagram located on the panels of the indoor and outdoor units.
- All wiring must be properly arranged to ensure that the control board cover can close properly. If the control board cover is not closed properly, it can lead to corrosion and cause the connection points on the terminal to heat up, catch fire, or cause electrical shock.
- If connecting power to fixed wiring, an all-pole disconnection device which has at least 3mm clearances in all poles, and have a leakage current that may exceed 10mA, the residual current device(RCD) having a rated residual operating current not exceeding 30mA, and disconnection must be incorporated in the fixed wiring in accordance with the wiring rules.

TAKE NOTE OF FUSE SPECIFICATIONS

The air conditioner's circuit board (PCB) is designed with a fuse to provide overcurrent protection. This fuse must be replaces with identical component.
The specifications of the fuse are printed on the circuit board ,examples of such are T5A/250VAC and T10A/250VAC.

⚠ WARNINGS FOR PRODUCT INSTALLATION

1. Installation must be performed by an authorized dealer or specialist. Defective installation can cause water leakage, electrical shock, or fire.
2. Installation must be performed according to the installation instructions. Improper installation can cause water leakage, electrical shock, or fire.
   (In North America,installation must be performed in accordance with the requirement of NEC and CEC by authorized personnel only.)
3. Contact an authorized service technician for repair or maintenance of this unit. This appliance shall be installed in accordance with national wiring regulations.
4. Only use the included accessories, parts, and specified parts for installation. Using non-standard parts can cause water leakage, electrical shock, fire, and can cause the unit to fail.
5. Install the unit in a firm location that can support the unit's weight. If the chosen location cannot support the unit's weight, or the installation is not done properly, the unit may drop and cause serious injury and damage.
6. Install drainage piping according to the instructions in this manual. Improper drainage may cause water damage to your home and property.
7. For units that have an auxiliary electric heater, **do not** install the unit within 1 meter (3 feet) of any combustible materials.
8. **Do not** install the unit in a location that may be exposed to combustible gas leaks. If combustible gas accumulates around the unit, it may cause fire.
9. Do not turn on the power until all work has been completed.
10. When moving or relocating the air conditioner, consult experienced service technicians for disconnection and reinstallation of the unit.
11. How to install the appliance to its support, please read the information for details in "indoor unit installation" and "outdoor unit installation" sections .
12. Excessive Weight Hazard - Use two or more people when moving and installing the unit. Failure to do so can result in back or other type of injury.

NOTE ABOUT FLUORINATED GASSES (NOT APPLICABLE TO THE UNIT USING R290 REFRIGERANT)

1. This air-conditioning unit contains fluorinated greenhouse gasses. For specific information on the type of gas and the amount, please refer to the relevant label on the unit itself or the "Owner's Manual - Product Fiche " in the packaging of the outdoor unit. (European Union products only).
2. Installation, service, maintenance and repair of this unit must be performed by a certified technician.
3. Product uninstallation and recycling must be performed by a certified technician.
4. For equipment that contains fluorinated greenhouse gases in quantities of 5 tonnes of CO_2 equivalent or more, but of less than 50 tonnes of CO_2 equivalent, If the system has a leak-detection system installed, it must be checked for leaks at least every 24 months.
5. When the unit is checked for leaks, proper record-keeping of all checks is strongly recommended.

NOTICE

The allowed static pressure range of the air conditioner on site is 0-0.80 in-H2O (0-200 Pa).

MODEL	18-24K	30-36K	48-60K
PRESSURE	0.10 in-H2O (25Pa)	0.15 in-H2O (37Pa)	0.20 in-H2O (50Pa)

ACCESSORIES

The air conditioning system comes with the following accessories. Use all of the installation parts and accessories to install the air conditioner. Improper installation may result in water leakage, electrical shock and fire, or equipment failure.

Accessories (Packed with the indoor unit)

Name	Shape	Quantity
Manual	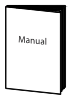	3
Remote controller		1
Battery		2
Flare-to-braze adapter	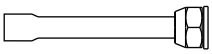	2
Wired remote controller	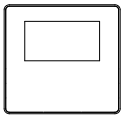	1
Cable ties		2
Foam		4
Flare nut		2

Accessories (Packed with the outdoor unit)

Name	Shape	Quantity
Drain fitting	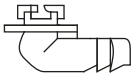	1
Gasket		1
Flare-to-braze adapter	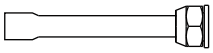	2

NOTICE

The remote control is only used to adjust the parameters.

INDOOR UNIT INSTALLATION

Indoor Unit Parts

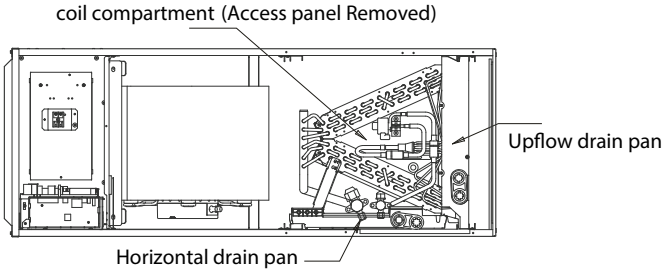

Safety Precautions

⚠ WARNING

- Securely install the indoor unit on a structure that can sustain its weight. If the structure is too weak, the unit may fall and cause personal injury, unit and property damage, or death.
- **DO NOT** install the indoor unit in a bathroom or laundry room as excessive moisture can short the unit and corrode the wiring.
- Danger of explosion. Keep flammable materials and vapors, such as gasoline, away from air handler. Place air handler so that heating elements are at least 18 inches (46 cm) above the floor for a garage installation. Failure to follow these instructions can result in death, explosion, or fire.

⚠ CAUTION

- Install the indoor and outdoor units, cables and wires at least 1m (3.2') from televisions or radios to prevent static or image distortion. Depending on the appliances, a 1m (3.2') distance may not be sufficient.
- If the indoor unit is installed on metal, it must be electrically grounded.

⚠ IMPORTANT

Please apply sealant around the places where the wires, refrigerant pipes and condensate pipes enter the cabinet.

Indoor Unit Installation Instructions

The indoor unit should be installed in a location that meets the following requirements:

- ☑ Enough room for installation and maintenance.
- ☑ Enough room for the connecting pipe and drainpipe.
- ☑ The ceiling is horizontal and its structure can sustain the weight of the indoor unit.
- ☑ The air inlet and outlet are not impeded.

⚠ CAUTION

DO NOT locations:

- ⊘ Areas with oil drilling or fracking
- ⊘ Coastal areas with high salt content in the air
- ⊘ Areas with caustic gases in the air, such as near hot springs
- ⊘ Enclosed spaces, such as cabinets
- ⊘ Areas with strong electromagnetic waves
- ⊘ Areas that store flammable materials or gas
- ⊘ Rooms with high humidity, such as bathrooms or laundry rooms

⚠ IMPORTANT

Use duct tape and/or Permagum to seal closed anyspace around the holes where the drain lines exit the cabinet. Warm air must not be allowed to enter throughany gaps or holes in the cabinet.

NOTICE

Remove all accessories and packing in the air outlet before installation.

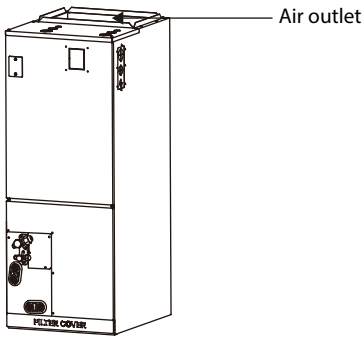

⚠ WARNING

There must be an airtight seal between the bottom of the air handler and the return air plenum. Use fiberglass sealing strips, foil duct tape, caulking, or equivalent sealing method between the plenum and the air handler cabinet to ensure a tight seal. Return air must not be drawn from a room where this air handler or any gas-fueled appliance (i.e., water heater), or carbon monoxide-producing device (i.e., wood fireplace) is installed.

Recommended Distances Between the Indoor Unit

The distance between the mounted indoor unit should meet the specifications illlustrated in the following diagram.

Horizontal installations

Plenum Clearances

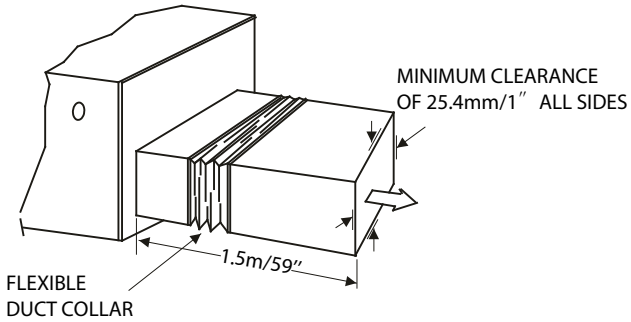

The outlet side pipe length is 1.5m/59″.

Vertical installations

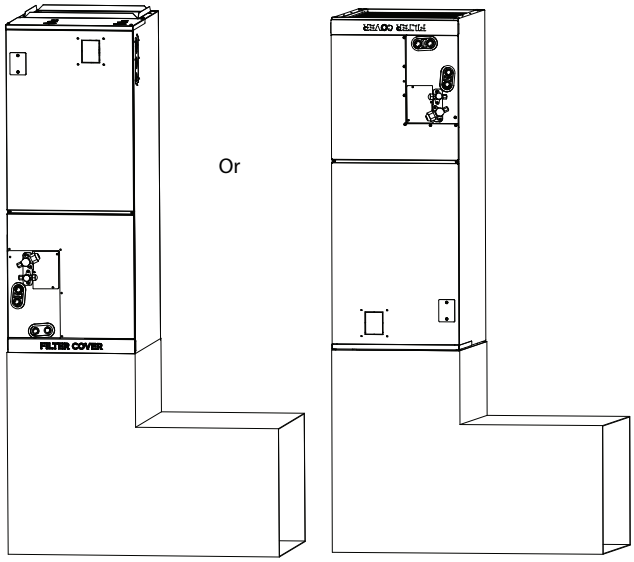

Fixing instructions: When installed vertically (upward or downward), the lower end of the air outlet needs to be connected to the L-shaped metal air duct and fastened by screws.

Indoor parts installation size

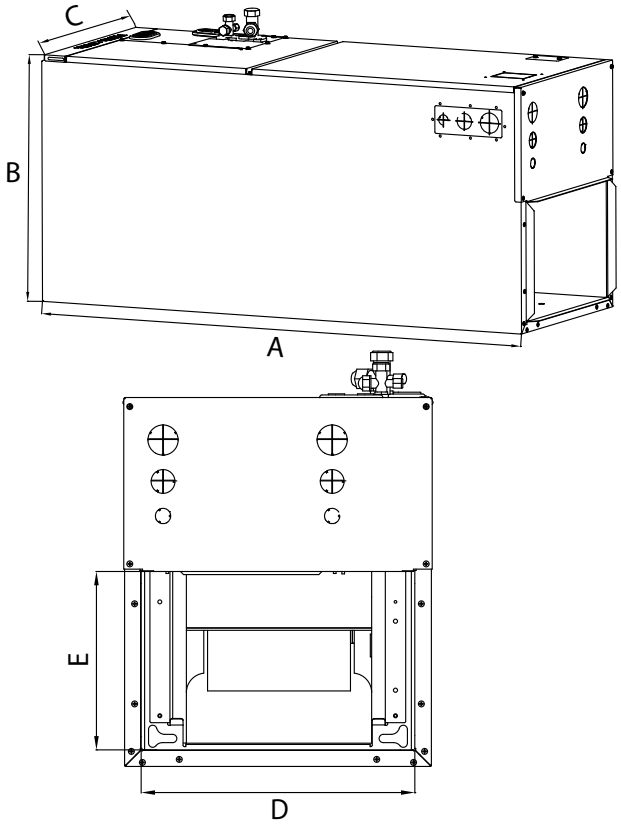

(unit: mm/inch)

MODEL(Btu/h) / Dimensions		18K~24K	30K~48K	60K
Length of A	mm	1143	1245	1346
	inch	45	49	53
Length of B	mm	533	533	533
	inch	21	21	21
Length of C	mm	445	534	622
	inch	17-1/2	21-1/50	24-1/2
Length of D	mm	400	490	580
	inch	15-3/4	19-5/16	22-27/32
Length of E	mm	260	260	260
	inch	10-1/4	10-1/4	10-1/4

Recommended size of filter

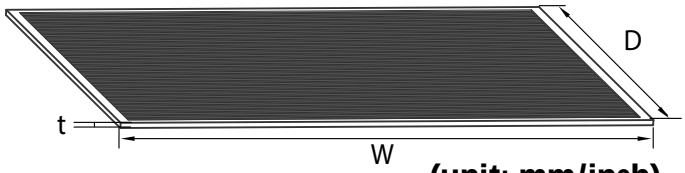

(unit: mm/inch)

MODEL(Btu/h)	W		D		t	
	mm	inch	mm	inch	mm	inch
18-24K	406.4	16	508	20	25.4	1
30-48K	495.3	19-1/2	508	20	25.4	1
60K	584.2	23	508	20	25.4	1

NOTICE

This product filter is only used for energy effciency sampling test, the user needs to use a filter that meets the requirements of UL900.

CAUTION

Air outlet grille shall be installed at the air outlet, and the dimension between grille sheets shall be less than 25.4mm(0.96") ; the air outlet grille cannot be removed without tools.

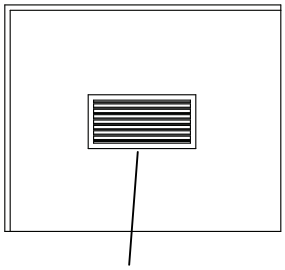

Installation place

Vertical installations

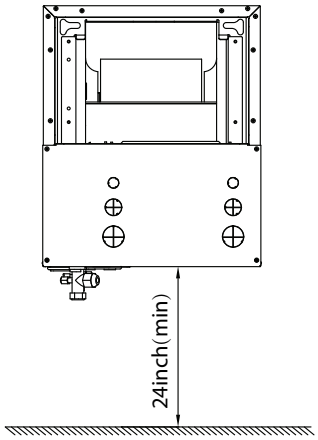

Horizontal installations

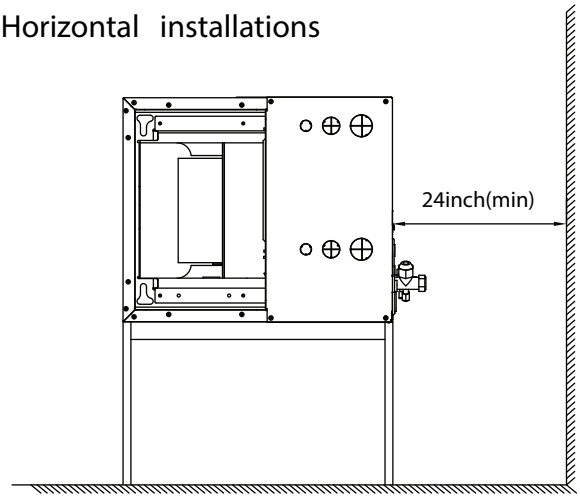

DUCT CONNECTIONS: Air supply and return may be handled in one of several ways best suited to the installation (See table for dimensions for duct inlet and outlet connections). The vast majority of problems encountered with combination cooling systems can be linked to improperly designed or installed duct systems. It is therefore highly important to the success of an installation that the duct system be properly designed and installed. Use flexible duct collars to minimize the transmission of vibration/noise into the conditioned space. Where return air duct is short, or where sound is could potentially to be a problem, sound absorbing liner should be used inside the duct.
Insulation of duct work is a must where it runs through an unconditioned space during the cooling season. The use of a vapor barrier is recommended to prevent absorption of moisture from the surrounding air into the insulation. The supply air duct should be properly sized by use of a transition to match unit opening. All ducts should be suspended using flexible hangers and never fastened directly to the structure. This unit is not designed for nonducted (freeblow) applications.
Duct work should be fabricated and installed in accordance with local and/or national codes.

IMPORTANT

A field-fabricated secondary drain pan, with a drain pipe to the outside of the building, is required in all installations over a finished living space or in any area that may be damaged by overflow from the main drain pan. In some localities, local codes may require a secondary drain pan for any horizontal installation.

Mount positions

The units can be installed in a vertical (down and up)and Horizontal(right and left) configuration.

Vertical up installations

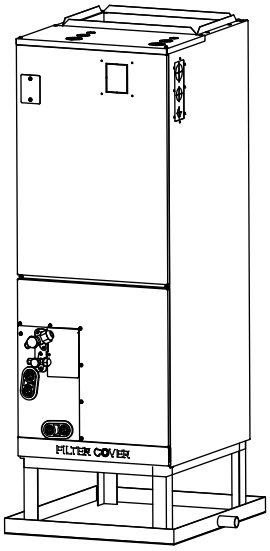

Horizontal installations

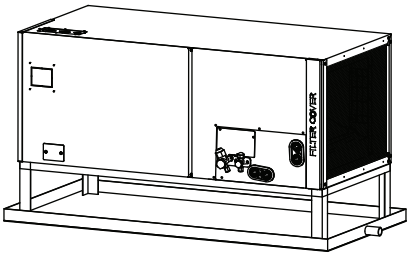

NOTICE

For horizontal installation, a secondary drain pan (not supplied) must be installed.

Please follow these steps to perform Vertical down installation and Horizontal right installation:

1. Open the upper cover.
2. Open the cover of the electronic control box.
3. Connect the wire according to the wiring diagram.
4. Connect the pipes.
5. Install the drainage pipes.

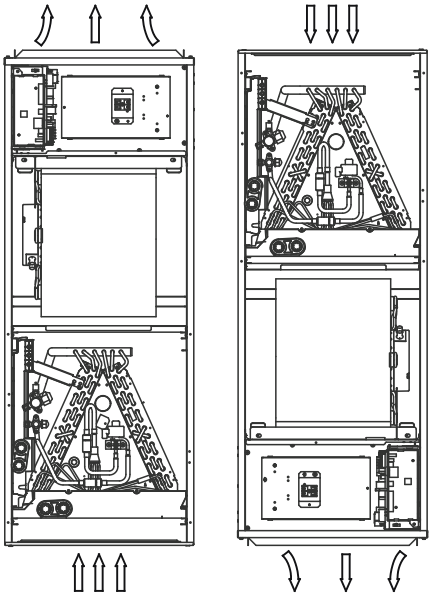

upflow downflow

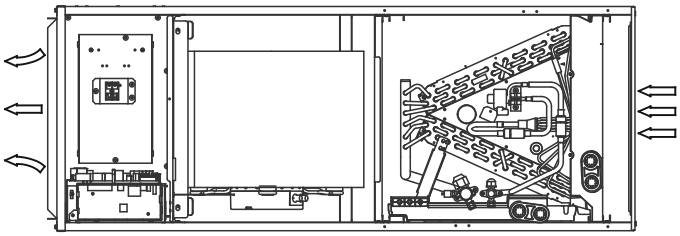

horizontal left

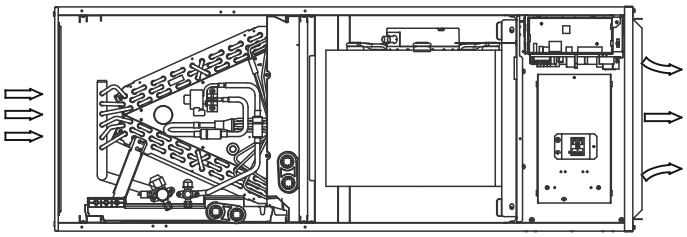

horizontal right

NOTICE

Vertical up and horizontal left installation does not need to change the direction of evaporator.

NOTICE

The unit may be installed in one of the upflow, downflow, horizontal left or horizontal right orientations.

Indication of the position of each temperature temperature sensor of the evaporator:

18-24K model

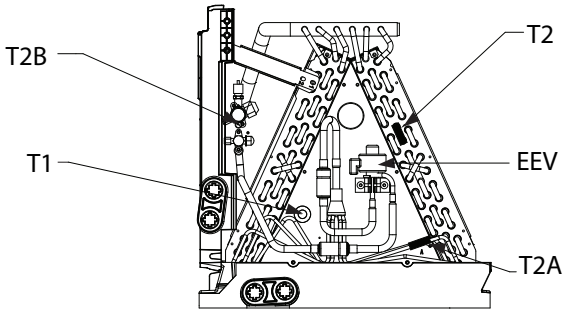

30-48K model

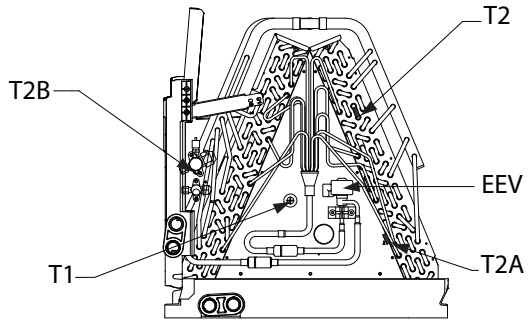

60K model

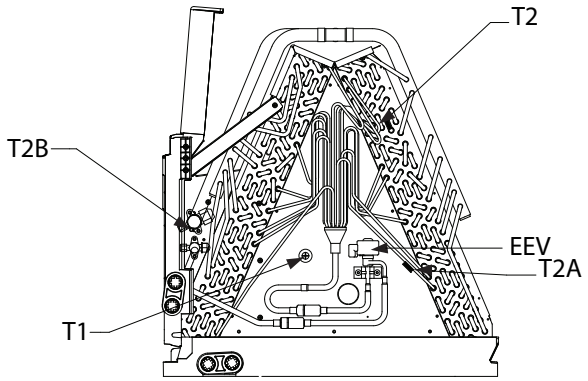

Reversing instructions:

1. Remove the fixed plate of the filter, then take the filter off.

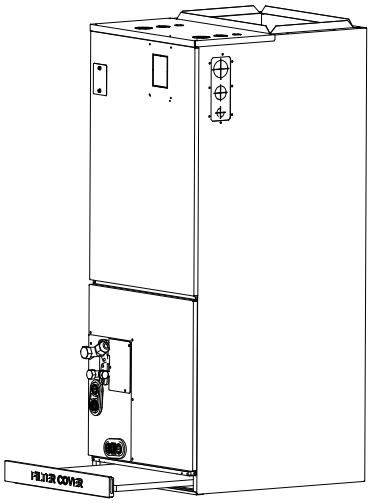

2. Remove the upper cover assembly.

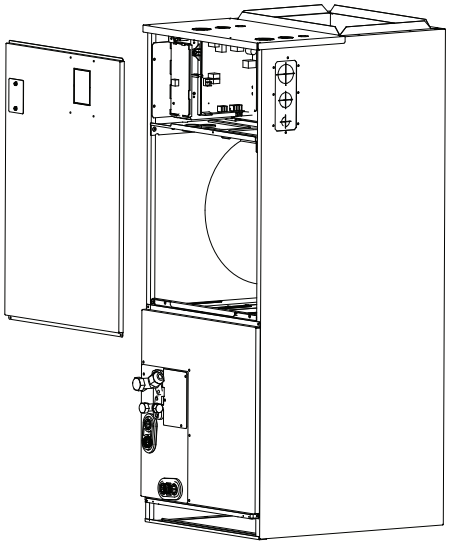

3. Remove evaporator cover plate.

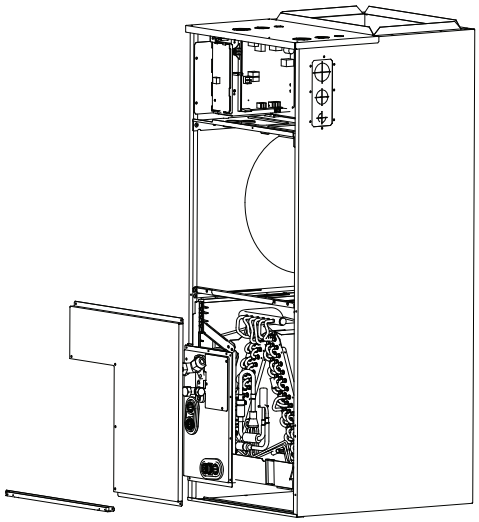

4. Unplug temperature sensors T1, T2, T2A, T2B and electronic expansion valve (EEV) from the control board.
   T1: room temperature sensor
   T2: Evaporator central sensor plug
   T2A: Evaporator intput sensor plug
   T2B: Evaporator output sensor plug

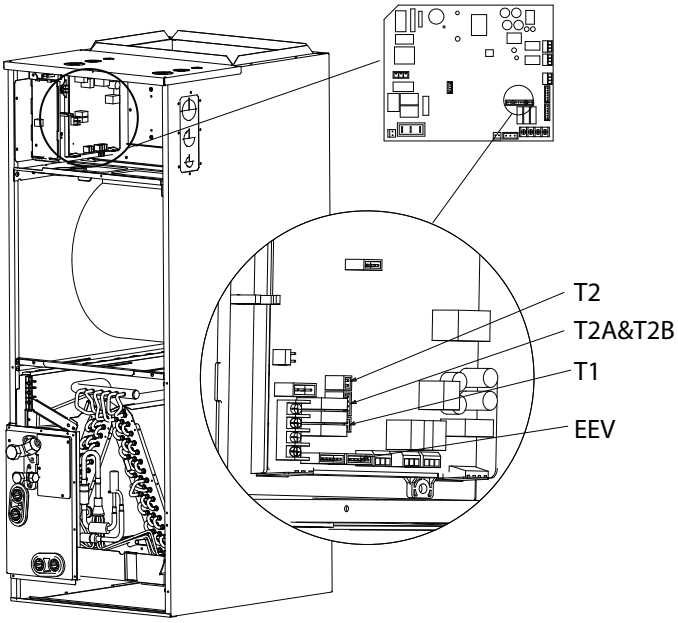

NOTICE

T2A and T2B are only available for some models.

5. Remove T1, T2, T2A, T2B, EEV sensor wire ties.

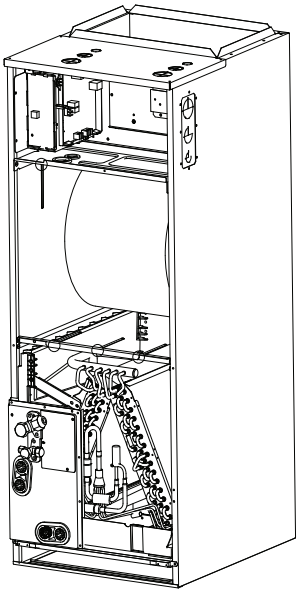

6. Take out the evaporator and drain pan and rotate 180°.

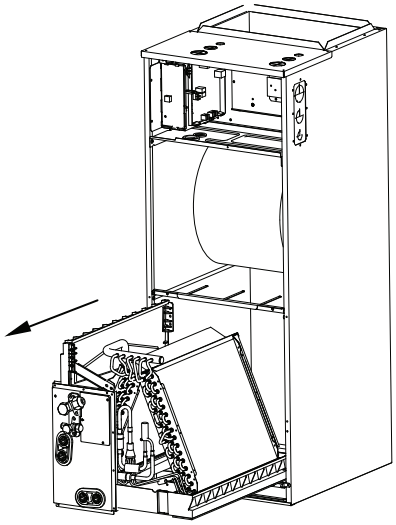

7. Adjust the position of the mounting parts.

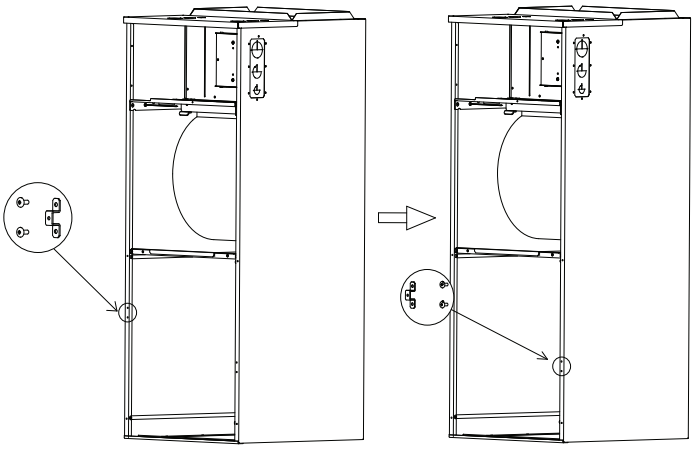

8. Reinstall the evaporator and drain pan.

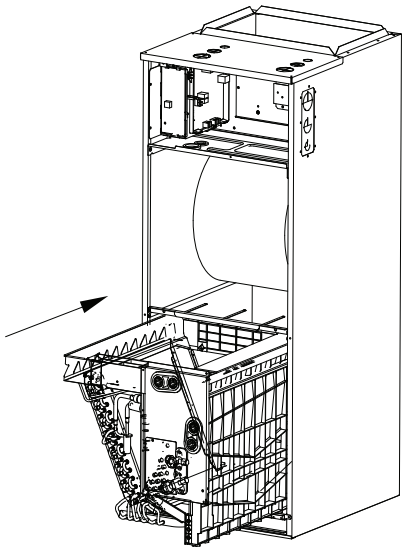

9. Reinstall T1, T2, T2A, T2B sensor plug, and electronic expansion valve (EEV) and tie up the sensor wires.

NOTICE

The wire body needs to pass through the wire groove from the drain pan and be stuck on the hook of the drain pan.

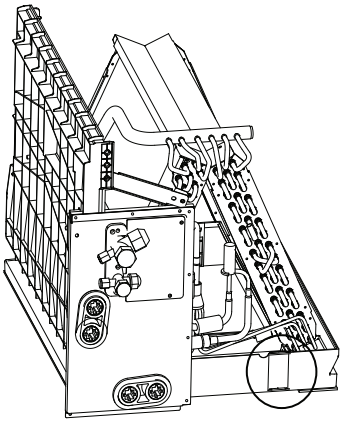

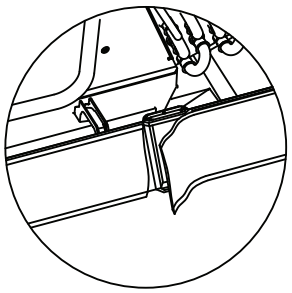

Cut the foam gasket.

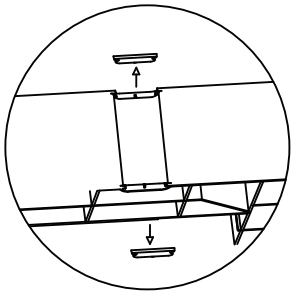

Remove knockouts as shown in the figure.

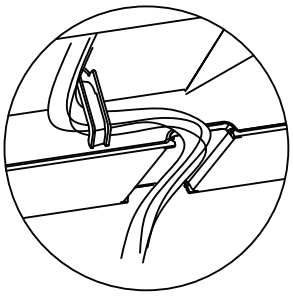

Hook the wire into the buckle and go down from the wire slot.

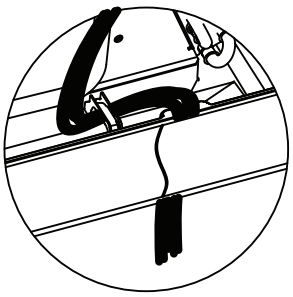

Replace foam gasket over wires.

10. The evaporator is assembled in place.

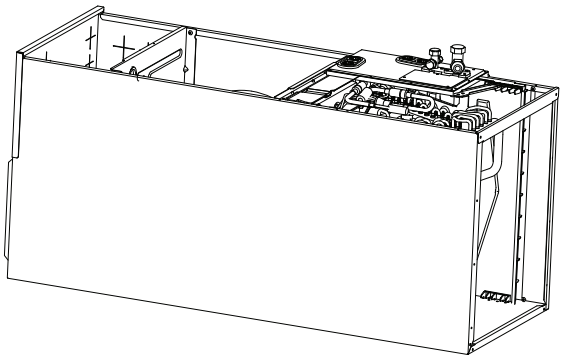

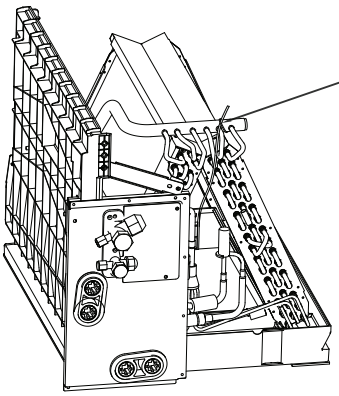

Use cable ties to fix the room temperature sensor as shown in the figure.

11. Reinstall evaporator cover plate.

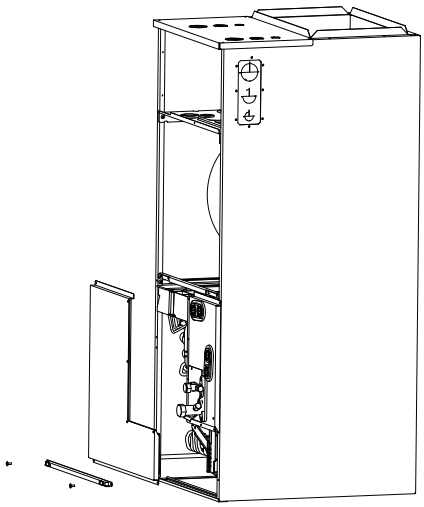

12. Connect the wire according to the wiring diagram.

13. Reassemble the upper cover.

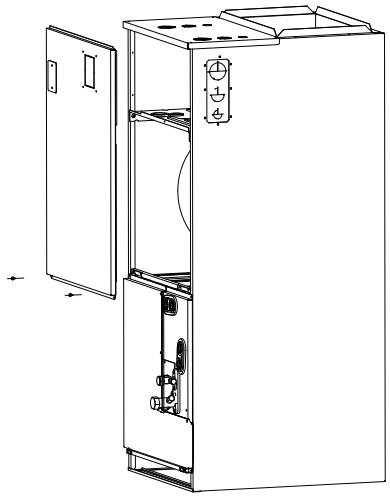

14. Reinstall the filter and filter cover plate.

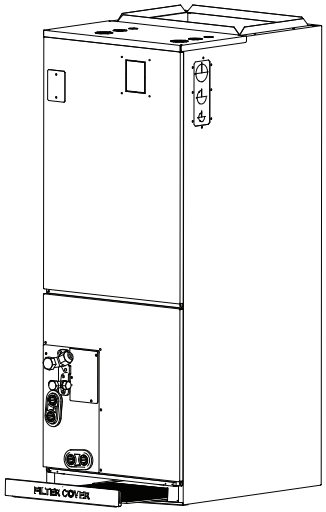

15. Connect the pipes.
16. Install the drainage pipes.

Drainpipe Installation

The drainpipe is used to drain water away from the unit. Improper installation may cause unit and property damage.

CAUTION

- Insulate all piping to prevent condensation, which could lead to water damage.
- If the drainpipe is bent or installed incorrectly, water may leak and cause a water-level switch malfunction.
- In HEAT mode, the outdoor unit will discharge water. Ensure that the drain hose is placed in an appropriate area to avoid water damage and slippage.
- **DO NOT** pull the drainpipe forcefully. This could disconnect it.

NOTE ON PURCHASING PIPES

Installation requires a polyethylene tube (Internally threaded tube 3/4 inch), which can be obtained at your local hardware store or dealer.

IMPORTANT

After removal of drain pan plug(s), check drain hole(s) to verify that drain opening is fully open and free of any debris. Also check to make sure that no debris has fallen into the drain pan during installation that may plug up the drain opening.
Seal around the exiting drain pipe, liquid and suction lines to prevent infiltration of humid air.
On units of this type, where the blower “draws” rather than “blows” air through the coil, traps must be installed in the condensate drain lines (primary and auxiliary, if used). Traps prevent the blower from drawing air through the drain lines into the air supply.

Indoor Drainpipe Installation

These units operate with a positive pressure at the drain connections and a drain trap is required.

The trap needs to be installed as close to the unit as possible. Make sure the top of the trap is below the connection to the drain pan to allow complete drainage of the pan.

VERTICAL DISCHARGE

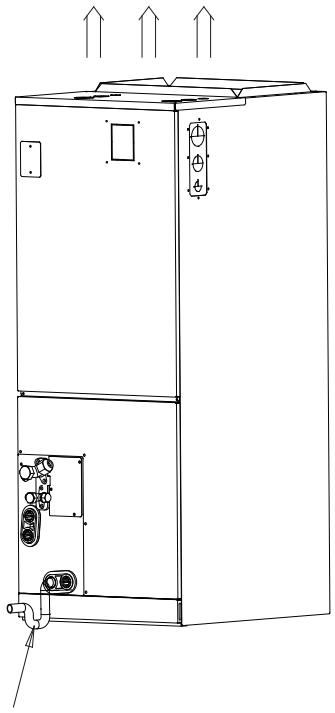

PRIMARY DRAIN

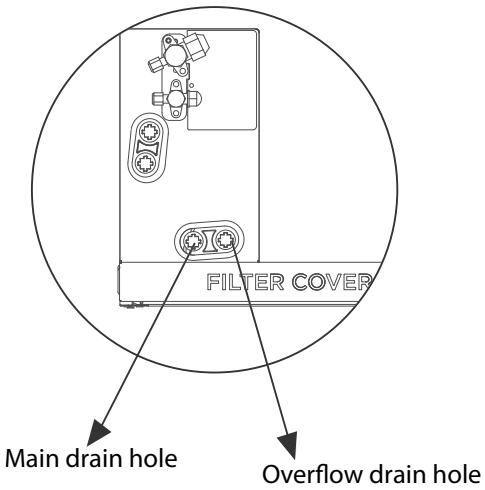

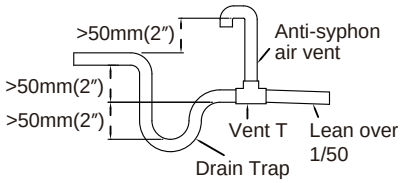

NOTICE

Horizontal runs must also have an anti-siphon air vent(standpipe) install ahead of the horizontal run to eliminate air trapping.

NOTE ON DRAINPIPE INSTALLATION

- When using an extended drainpipe, tighten the indoor connection with an additional protection tube to prevent it from pulling loose.
- The Figure shows how to trap or plug all drains during vertical discharge.
- The Figure shows how to trap or plugall drains during right-hand discharge.
- The seal plug are supplied as accessories and should be screwed tightly only by hand.
- Incorrect installation could cause water to flow back into the unit and flood.

NOTICE

The drainpipe outlet should be at least 5cm (1.9") above the ground. If it touches the ground, the unit may become blocked and malfunction.

Refrigerant Piping Connection

Safety Precautions

WARNING

- All field piping must be completed by a licensed technician and must comply with the local and national regulations.
- When the air conditioner is installed in a small room, measures must be taken to prevent the refrigerant concentration in the room from exceeding the safety limit in the event of refrigerant leakage. If the refrigerant leaks and its concentration exceeds its proper limit, hazards due to lack of oxygen may result.
- When installing the refrigeration system, ensure that air, dust, moisture or foreign substances do not enter the refrigerant circuit. Contamination in the system may cause poor operating capacity, high pressure in the refrigeration cycle, explosion or injury.
- Ventilate the area immediately if there is refrigerant leakage during the installation. Leaked refrigerant gas is both toxic and flammable. Ensure there is no refrigerant leakage after completing the installation work.

Notes On Pipe Length and Elevation

Ensure that the length of the refrigerant pipe, the number of bends, and the drop height between the indoor and outdoor units meets the requirements shown in the following table:

The Maximum Length And Drop Height Based on Models. (Unit: m/ft.)

Type of model	Capacity (Btu/h)	Length of piping	Maximum drop height
North America, Australia and the eu frequency conversion Split Type	<15K	25/82	10/32.8
	≥15K - <24K	30/98.4	20/65.6
	≥24K - <36K	50/164	25/82
	≥36K - ≤60K	65/213	30/98.4
Other Split Type	12K	15/49	8/26
	18K-24K	25/82	15/49
	30K-36K	30/98.4	20/65.6
	42K-60K	50/164	30/98.4

CAUTION

Oil traps

If oil flows back into the outdoor unit's compressor, this might cause liquid compression or deterioration of oil return. Oil traps in the rising gas piping can prevent this.

An oil trap should be installed every 6m(20ft) of vertical suction line riser (＜36000Btu/h unit).

An oil trap should be installed every 10m(32.8ft) of vertical suction line riser (≥36000Btu/h unit).

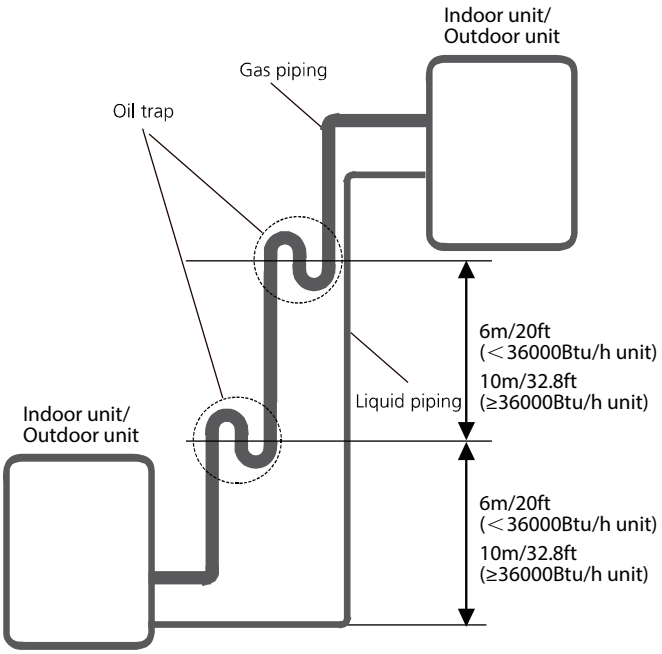

Name	Shape		Quantity(PC)
Connecting pipe assembly	Liquid side	Φ6.35(1/4in)	Parts you must purchase separately. Consult the dealer about the proper pipe size of the unit you purchased.
		Φ9.52(3/8in)	
	Gas side	Φ12.7(1/2in)	
		Φ16(5/8in)	
		Φ19(3/4in)	
		Φ22(7/8in)	

Connection Instructions – Refrigerant Piping

⚠ CAUTION

- The branching pipe must be installed horizontally. An angle of more than 10° may cause malfunction.
- **DO NOT** install the connecting pipe until both indoor and outdoor units have been installed.
- Insulate both the gas and liquid piping to prevent condensation.

Step 1: Cut pipes

When preparing refrigerant pipes, take extra care to cut and flare them properly. This will ensure efficient operation and minimize the need for future maintenance.

1. Measure the distance between the indoor and outdoor units.
2. Using a pipe cutter, cut the pipe a little longer than the measured distance.
3. Make sure that the pipe is cut at a perfect 90° angle.

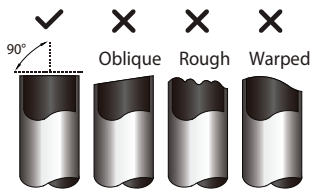

⊘ DO NOT DEFORM PIPE WHILE CUTTING

Be extra careful not to damage, dent, or deform the pipe while cutting. This will drastically reduce the heating efficiency of the unit.

Step 2: Remove burrs.

Burrs can affect the air-tight seal of refrigerant piping connection. They must be completely removed.

1. Hold the pipe at a downward angle to prevent burrs from falling into the pipe.
2. Using a reamer or deburring tool, remove all burrs from the cut section of the pipe.

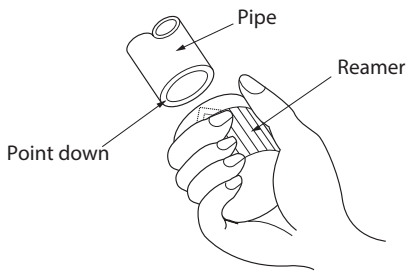

Step 3: Flare pipe ends

Proper flaring is essential to achieve an airtight seal.

1. After removing burrs from cut pipe, seal the ends with PVC tape to prevent foreign materials from entering the pipe.
2. Sheath the pipe with insulating material.
3. Place flare nuts on both ends of pipe. Make sure they are facing in the right direction, because you can't put them on or change their direction after flaring.

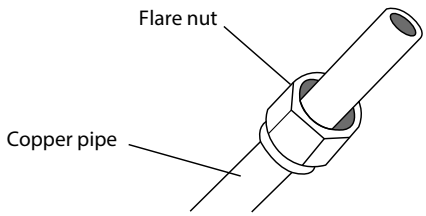

4. Remove PVC tape from ends of pipe when ready to perform flaring work.

5. Clamp flare form on the end of the pipe.
   The end of the pipe must extend beyond the flare form.

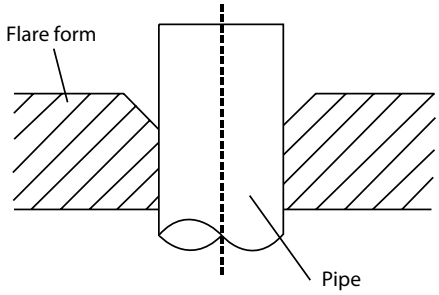

6. Place flaring tool onto the form.
7. Turn the handle of the flaring tool clockwise until the pipe is fully flared. Flare the pipe in accordance with the dimensions.

PIPING EXTENSION BEYOND FLARE FORM

Pipe gauge	Tightening torque	Flare dimension (A) (Unit: mm/Inch)		Flare shape
		Min.	Max.	
Ø 6.35	18-20 N.m (183-204 kgf.cm)	8.4/0.33	8.7/0.34	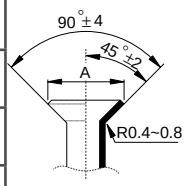
Ø 9.52	25-26 N.m (255-265 kgf.cm)	13.2/0.52	13.5/0.53	
Ø 12.7	35-36 N.m (357-367 kgf.cm)	16.2/0.64	16.5/0.65	
Ø 16	45-47 N.m (459-480 kgf.cm)	19.2/0.76	19.7/0.78	
Ø 19	65-67 N.m (663-683 kgf.cm)	23.2/0.91	23.7/0.93	
Ø 22	75-85N.m (765-867 kgf.cm)	26.4/1.04	26.9/1.06	

8. Remove the flaring tool and flare form, then inspect the end of the pipe for cracks and even flaring.

Step 4: Connect pipes

Connect the copper pipes to the indoor unit first, then connect it to the outdoor unit. You should first connect the low-pressure pipe, then the high-pressure pipe.

1. When connecting the flare nuts, apply a thin coat of refrigeration oil to the flared ends of the pipes.
2. Align the center of the two pipes that you will connect.
3. Tighten the flare nut snugly by hand.
4. Using a wrench, grip the nut on the unit tubing.
5. While firmly gripping the nut, use a torque wrench to tighten the flare nut according to the torque values in above table.

NOTICE: Use both a spanner and a torque wrench when connecting or disconnecting pipes to/from the unit.

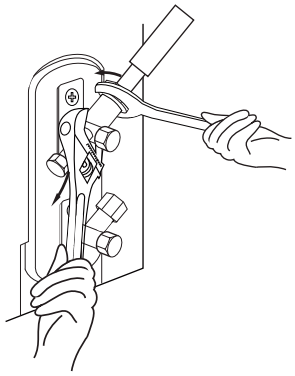

⚠ CAUTION

- Ensure to wrap insulation around the piping. Direct contact with the bare piping may result in burns or frostbite.
- Make sure the pipe is properly connected. Over tightening may damage the bell mouth and under tightening may lead to leakage.

NOTE ON MINIMUM BEND RADIUS

Carefully bend the tubing in the middle according to the diagram below. **DO NOT** bend the tubing more than 90° or more than 3 times.

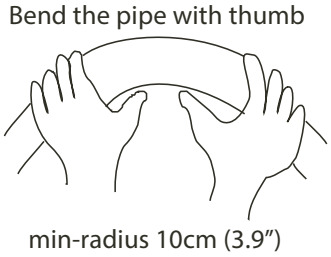

6. After connecting the copper pipes to the indoor unit, wrap the power cable, signal cable and the piping together with binding tape.

NOTICE: DO NOT intertwine signal cable with other wires. While bundling these items together, do not intertwine or cross the signal cable with any other wiring.

7. Thread this pipeline through the wall and connect it to the outdoor unit.
8. Insulate all the piping, including the valves of the outdoor unit.
9. Open the stop valves of the outdoor unit to start the flow of the refrigerant between the indoor and outdoor unit.

⚠ CAUTION

Check to make sure there is no refrigerant leak after completing the installation work. If there is a refrigerant leak, ventilate the area immediately and evacuate the system (refer to the Air Evacuation section of this manual).

60K Air-Handler Air Conditioners Refrigerant Piping Connection

Complete the indoor unit connection pipe assembly as shown below, use flare-to-braze (3/4" to 7/8") and flare-to-braze (3/8" to 3/8") adapters to connect 7/8 "Line set. If you connect it in a way other than the one shown in the figure, it will cause the performance of the product to decrease.

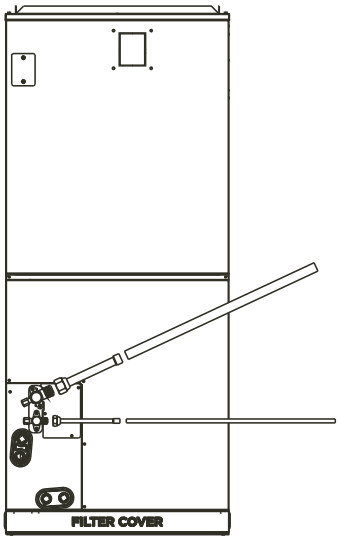

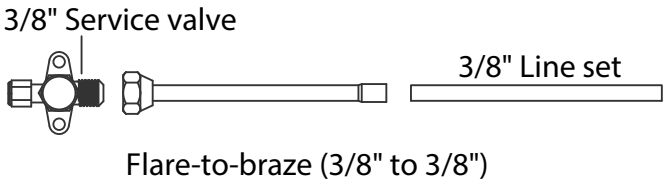

Flare-to-braze (3/8" to 3/8")

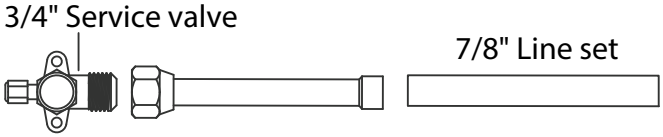

Flare-to-braze (3/4" to 7/8")

After the unit is installed, Wrap the valve body with insulation material to prevent condensation.

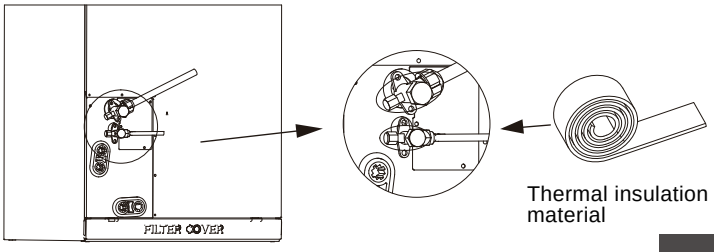

Installation of Electric Auxiliary Heat Module (for some models)(not supplied)

Accessories

Name	Shape	Quantity
Manual		2
Foam gasket		1
Screws		7
Silicone breaker cover		1
Electric auxiliary heating wiring diagram		1
Circuit breaker label		1

NOTICE

Installation must be performed by an licensed contractor. Please make necessary protection when installing the unit.

For installations requiring supplemental heating, the optional Electric Auxiliary Heat Module is available in sizes from 3kW to 25kW to accommodate appropriate sizing given the specific heat load and electrical requirements of each installation. Please refer to the table below for selection of available sizes of each model, being sure to avoid improper matching.

NOTICE

Only use matched modules certified for use with model. Please refer to the Electric Auxiliary Heat Model specification for additional details to ensure proper selection and installation.

MODEL (Btu/h)	3kW	5kW	8kW	10kW	15kW	20kW	25kW
18K	Y	Y	Y	Y	-	-	-
24K	-	Y	Y	Y	Y	-	-
30K	-	Y	Y	Y	Y	-	-
36K	-	Y	Y	Y	Y	Y	-
48K	-	-	Y	Y	Y	Y	-
60K	-	-	-	Y	Y	Y	Y

Installation Requirements

Before installation, please confirm the electric auxiliary heat module and supplied accessories are complete and free of any damage. Do not attempt to install if damage is present.

Electric Auxiliary Heat Module installation and Wiring Operation

1. Remove the upper cover and use professional tools to remove the knock-out holes of the upper cover.

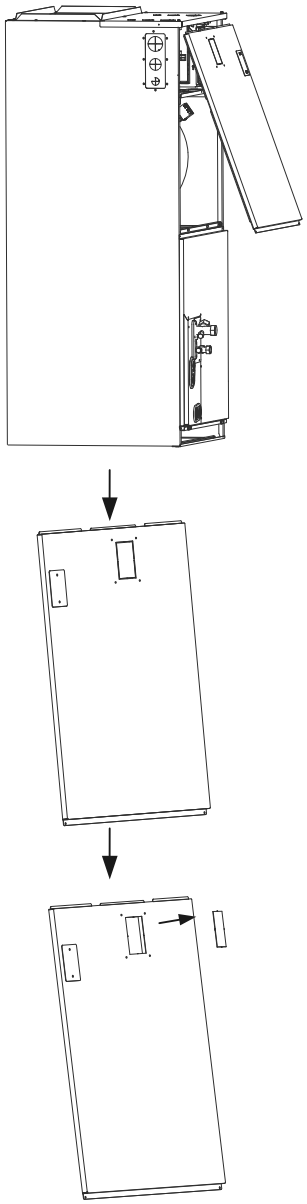

2. Remove the terminal block and power wires, loosen the screws, and remove the electric auxiliary heating cover.

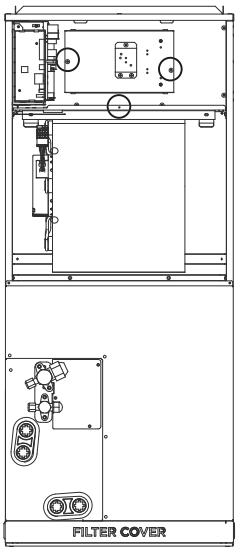

3. Install the electric auxiliary heating assembly into the chassis shell from the front, and note that the front end needs to be inserted into the shell assembly hole.

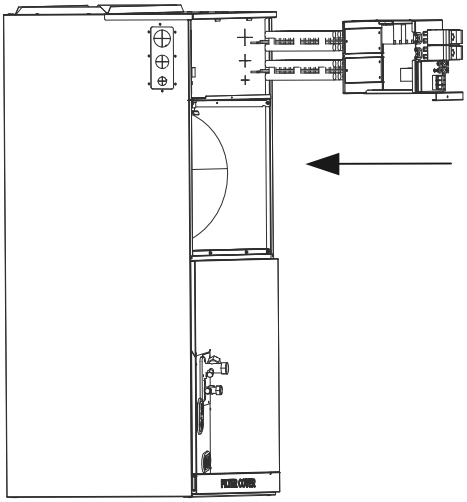

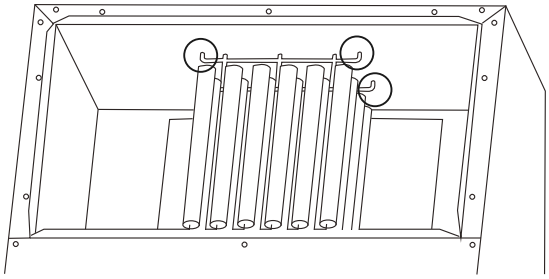

4. Tighten the mounting screws.

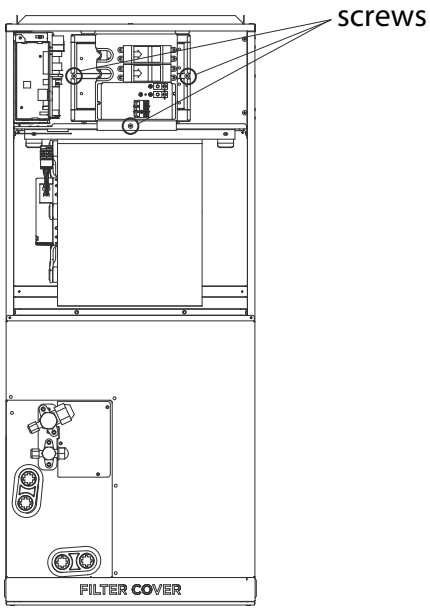

5. Wire according to the wiring nameplate.
6. Tape the wiring diagram to the inside cover wiring is completed for future reference and maintenance.
7. Install the upper cover.
8. Install silicone breaker cover.

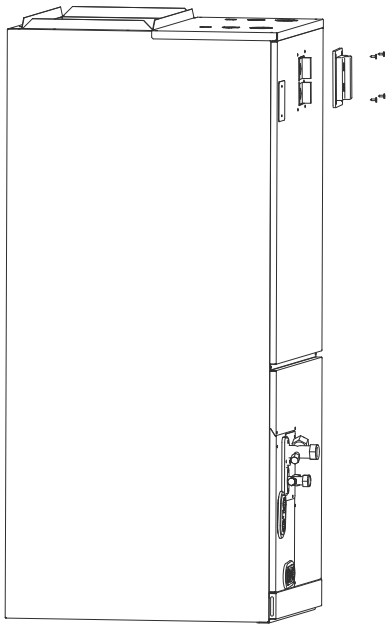

9. After installing the electric auxiliary heat module, apply the circuit breaker label near the silicone breaker cover that was just applied.

After the electric heating wiring is connected, please confirm before power on:

- Check all wiring and ensure reliable connection of wire body.
- Check the electric heating fixing screw, and the screw is fix reliably.
- The size selection of power wire meets the power supply requirements.

Specifications	Number of circuit breakers	Number of relays	Number of power cord groups	Number of power cord grounding screws
3kW	1	1	2	2
5kW	1	1	2	2
8kW	1	2	2	2
10kW	1	2	2	2
15kw	2	3	3	3
20kW	2	4	3	3
25kW	3	5	4	4

NOTICE

Electric auxiliary heating wiring diagram packed with the accessories.

NOTICE

If branch circuit wire lenght exceeds 100 ft, consult NEC 210-19a to determine maximum wire length. Use 2% voltage drop.

UNITS WITHOUT ELECTRICAL HEAT

UNIT SIZE	VOLTS-PHASE	Rated current (A)	MIN CKT AMPS	BRANCH CIRCUIT MIN WIRE SIZE AWG*	BRANCH CIRCUIT FUSE/CKT BKR AMPS
18K	208/230-1	2.0	2.5	16#	15.0
24K	208/230-1	3.0	4.0	16#	15.0
30K	208/230-1	3.5	4.5	16#	15.0
36K	208/230-1	4.0	5.0	16#	15.0
48K	208/230-1	6.0	7.5	16#	15.0
60K	208/230-1	7.0	9.0	16#	15.0

Use copper wire only to connect unit. If other than uncoated (non-plated) 75°C copper wire (solid wire for 10 AWG and smaller, stranded wire for larger than 10 AWG) is used consult applicable tables of the National Electric Code (ANSI/NFPA 70)

NOTICE

The specification may be different between different models ,please refer to indoor unit ' s nameplate.

Auxilliary Heater Electrical Data

208/230V

			CIRCUIT 1			CIRCUIT 2			CIRCUIT 2		
Heater Part No.	Heater KW	Internal Circuit Protection	Heater Amps	MCA (1)	MOCP (2)	Heater Amps	MCA (1)	MOCP (2)	Heater Amps	MCA (1)	MOCP (2)
EAH-03B(UL)	3	Ckt Bkr	10.8/12.0	14.0/16.0	15.0/20.0	/	/	/	/	/	/
EAH-05B(UL)	5	Ckt Bkr	18.0/20.0	23.0/27.0	25.0/30.0	/	/	/	/	/	/
EAH-08B(UL)	8	Ckt Bkr	28.8/32.0	37.0/42.0	40.0/45.0	/	/	/	/	/	/
EAH-10B(UL)	10	Ckt Bkr	36.0/40.0	46.0/53.0	50.0/60.0	/	/	/	/	/	/
EAH-15B(UL)	15	Ckt Bkr	18.0/20.0	23.0/27.0	25.0/30.0	36.0/40.0	46.0/53.0	50.0/60.0	/	/	/
EAH-20B(UL)	20	Ckt Bkr	36.0/40	46.0/53.0	50.0/60.0	36.0/40.0	46.0/53.0	50.0/60.0	/	/	/
EAH-25B(UL)	25	Ckt Bkr	18.0/20.0	23.0/27.0	25.0/30.0	36.0/40.0	46.0/53.0	50.0/60.0	36.0/40.0	46.0/53.0	50.0/60.0

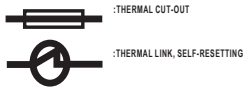

No heater coil

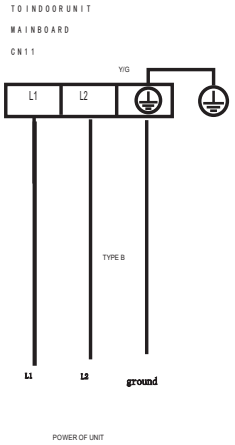

NOTE1:
This symbol indicates the element is optional, The wiring type of the actual unit shall prevail.

NOTE2:
PLEASE ATTACH THE NAMEPLATE TO THE COVER OF THE ELECTRIC CONTROL BOX. ALL THE ROUND HOLES LOCATED ON THE PLATE REPRESENT NUMBERS. PLEASE REFER TO THE INSTALLATION MANUAL FOR DETAILS.

Round hole number	Relay number	Round hole number	Air switch number
	RELAY 1		CB1

Disregard Type A below only Type B power is used on BMAH models

IF THE POWER LINE TERMINALS OF AHU IS TYPE A ,THE 'S' TERMINAL MUST BE CONNECTED,FOR TYPE B PLEASE KEEP 'S' TERMINAL DISCONNECTED.

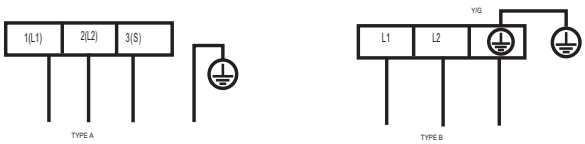

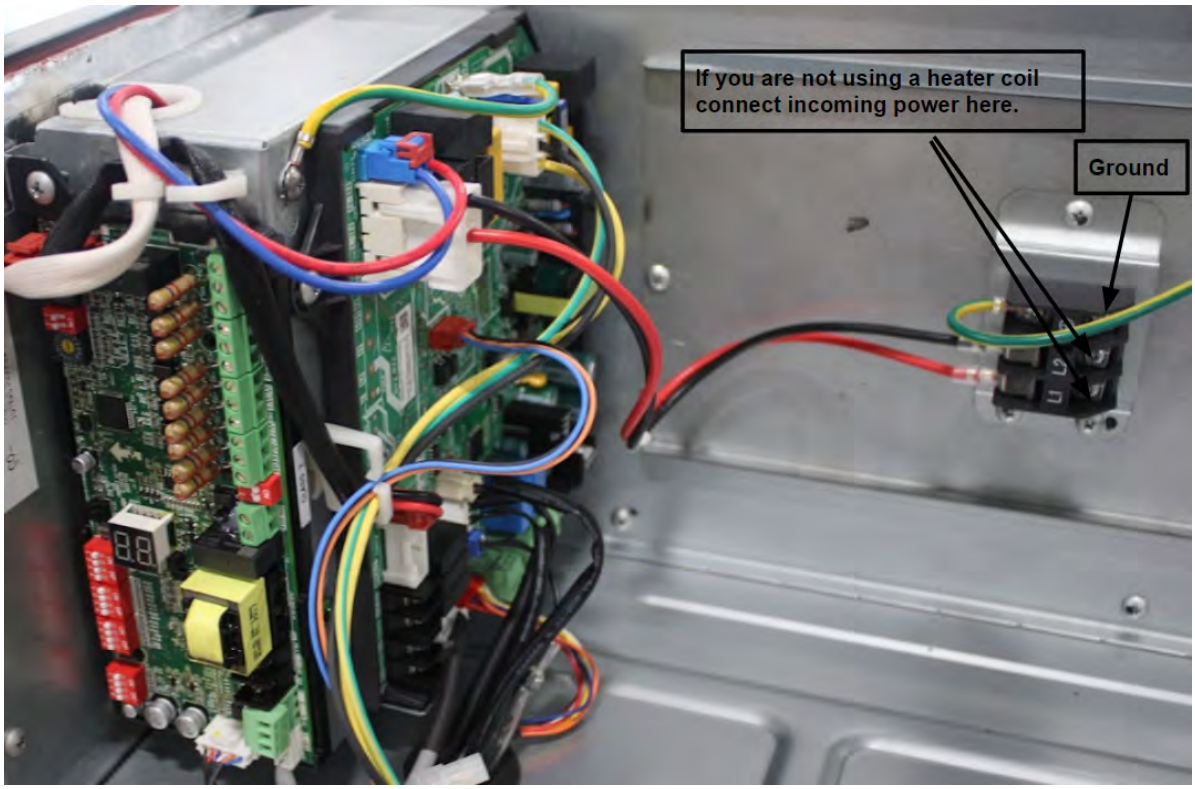

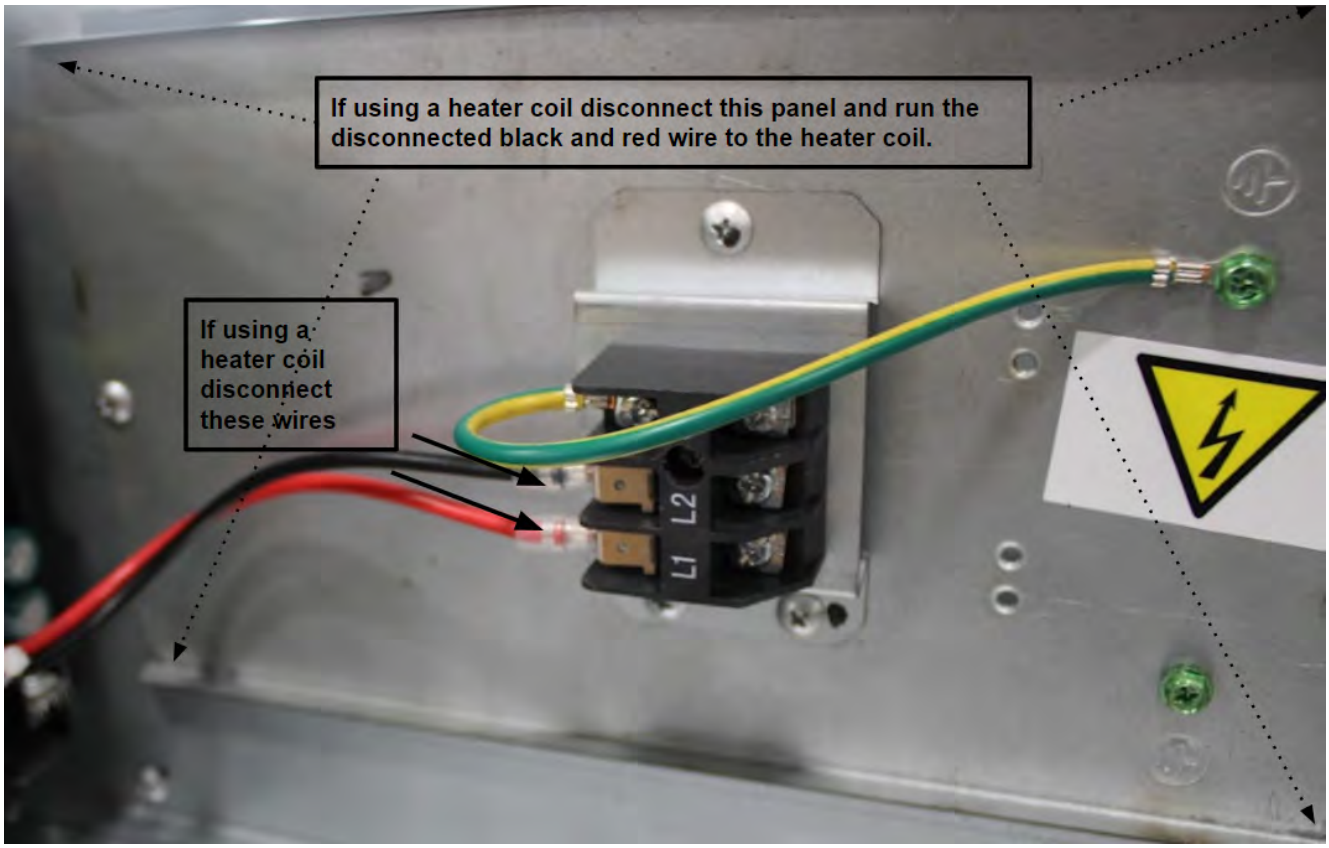

If using a heater coil disconnect the red and black wires above, and cut back any attached connector and strip 1/2 of insulation from the end of the wires. Then remove the panel and run the disconnected black and red wires to the heater coil. Follow the instructions below to supply the air handler with power when installing a heater coil in the BMAH series of air handlers.

3KW/5KW HEAT KIT

:THERMAL CUT-OUT

:THERMAL LINK, SELF-RESETTING

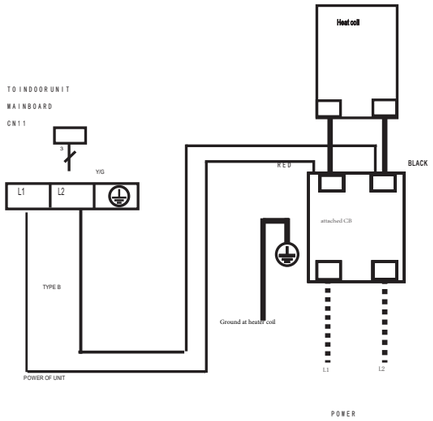

NOTE1:

This symbol indicates the element is

optional, The wiring type of the actual unit shall prevail.

NOTE2:
PLEASE ATTACH THE NAMEPLATE TO THE COVER OF THE ELECTRIC CONTROL BOX. ALL THE ROUND HOLES LOCATED ON THE PLATE REPRESENT NUMBERS. PLEASE REFER TO THE INSTALLATION MANUAL FOR DETAILS.

Round hole number	Relay number	Round hole number	Air switch number
	RELAY 1		CB1

Disregard Type A below only Type B power is used on BMAH models

IF THE POWER LINE TERMINALS OF AHU IS TYPE A ,THE 'S' TERMINAL MUST BE CONNECTED,FOR TYPE B PLEASE KEEP 'S' TERMINAL DISCONNECTED.

8KW/10KW HEAT KIT

:THERMAL CUT-OUT

:THERMAL LINK, SELF-RESETTING

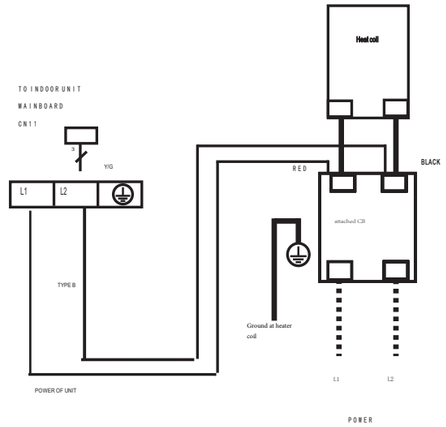

NOTE1:

This symbol indicates the element is

optional, The wiring type of the actual unit shall prevail.

NOTE2:
PLEASE ATTACH THE NAMEPLATE TO THE COVER OF THE ELECTRIC CONTROL BOX. ALL THE ROUND HOLES LOCATED ON THE PLATE REPRESENT NUMBERS. PLEASE REFER TO THE INSTALLATION MANUAL FOR DETAILS.

Round hole number	Relay number	Round hole number	Air switch number
	RELAY 1		CB1
	RELAY 2		

Disregard Type A below only Type B power is used on BMAH models

IF THE POWER LINE TERMINALS OF AHU IS TYPE A ,THE 'S' TERMINAL MUST BE CONNECTED,FOR TYPE B PLEASE KEEP 'S' TERMINAL DISCONNECTED.

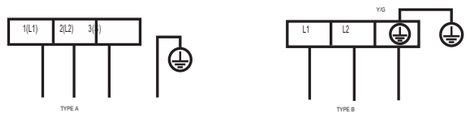

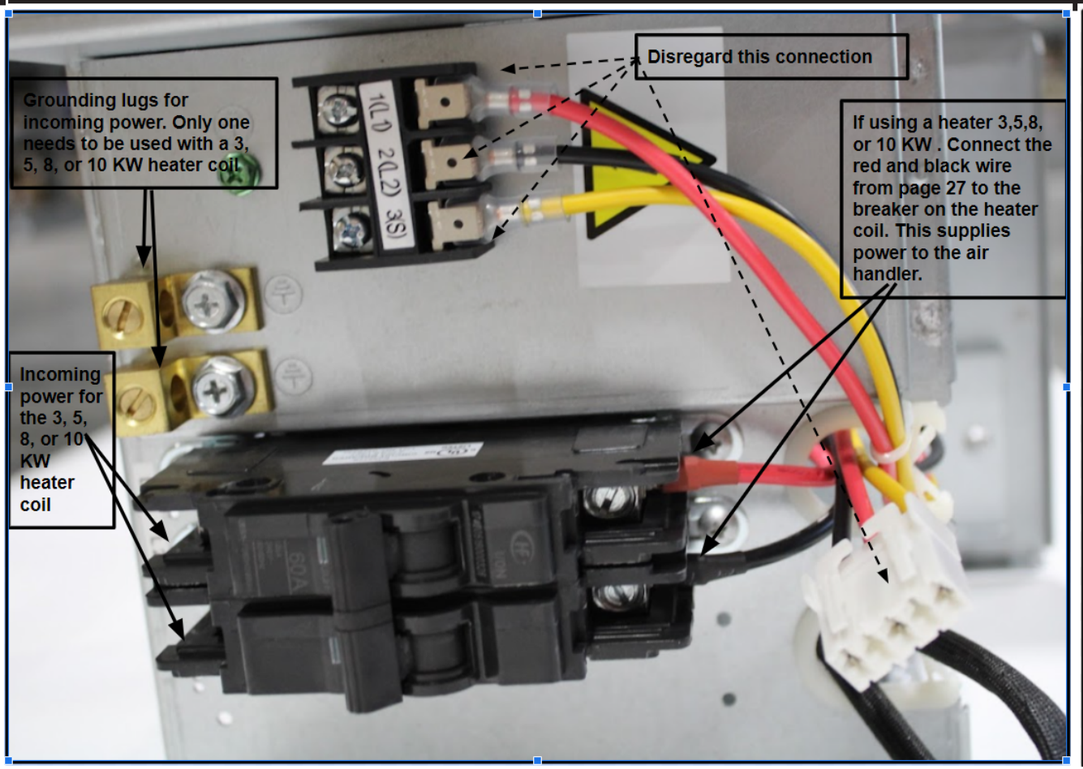

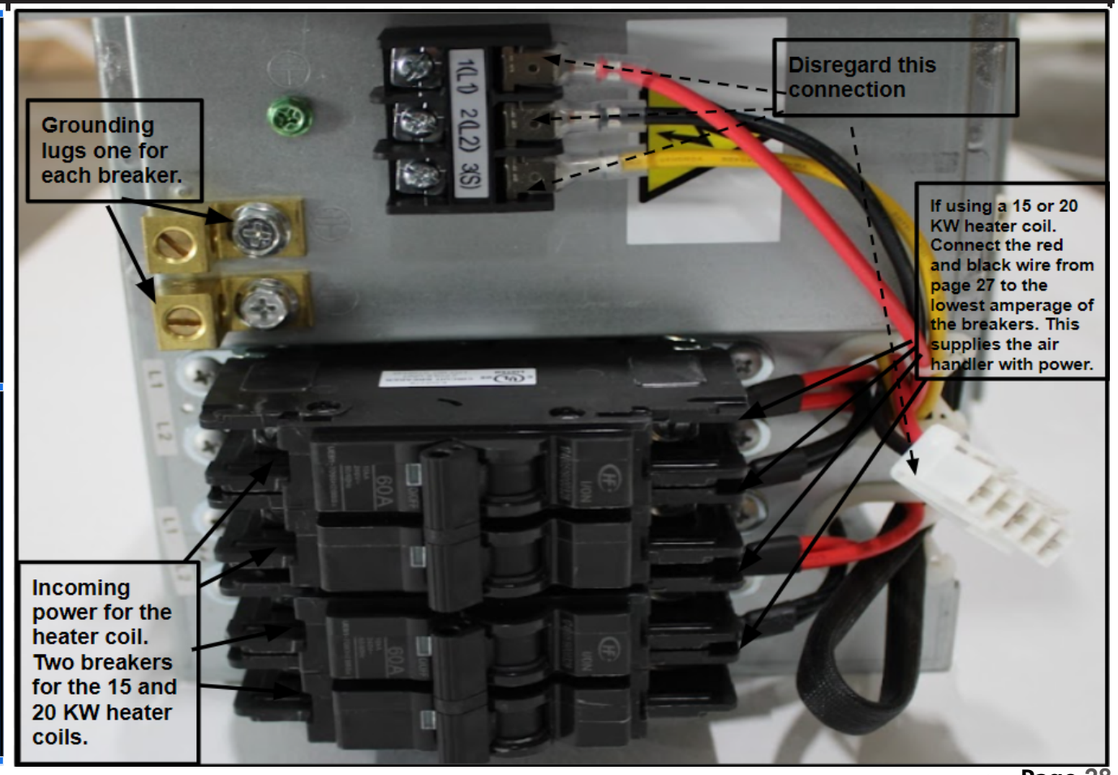

15KW HEAT KIT

:THERMAL CUT-OUT

:THERMAL LINK, SELF-RESETTING

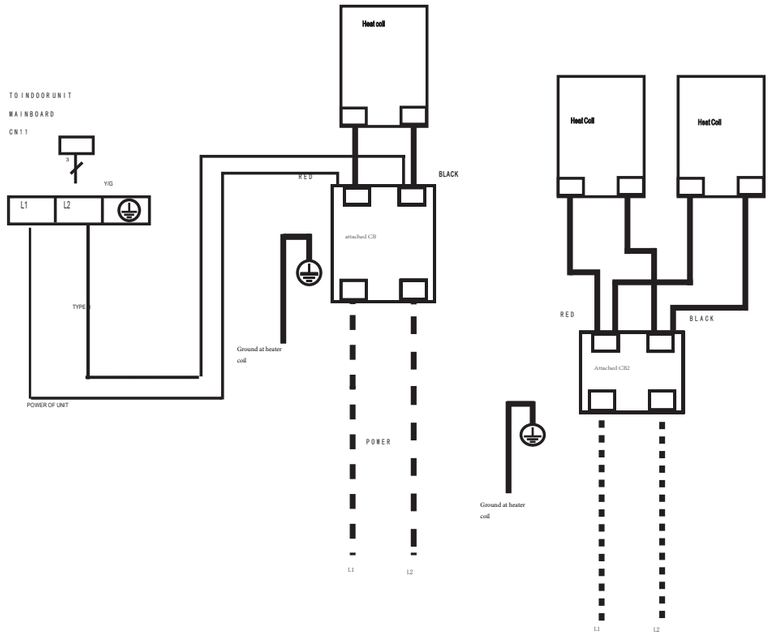

POWER A POWER B

NOTE1:

This symbol indicates the element is

optional, The wiring type of the actual unit shall prevail.

NOTE2:
PLEASE ATTACH THE NAMEPLATE TO THE COVER OF THE ELECTRIC CONTROL BOX. ALL THE ROUND HOLES LOCATED ON THE PLATE REPRESENT NUMBERS. PLEASE REFER TO THE INSTALLATION MANUAL FOR DETAILS.

Round hole number	Relay number	Round hole number	Air switch number
	RELAY1		CB1
	RELAY2		CB2
	RELAY 4		

Disregard Type A below only Type B power is used on BMAH models

IF THE POWER LINE TERMINALS OF AHU IS TYPE A ,THE 'S' TERMINAL MUST BE CONNECTED,FOR TYPE B PLEASE KEEP 'S' TERMINAL DISCONNECTED.

20KW HEAT KIT

:THERMAL CUT-OUT

:THERMAL LINK, SELF-RESETTING

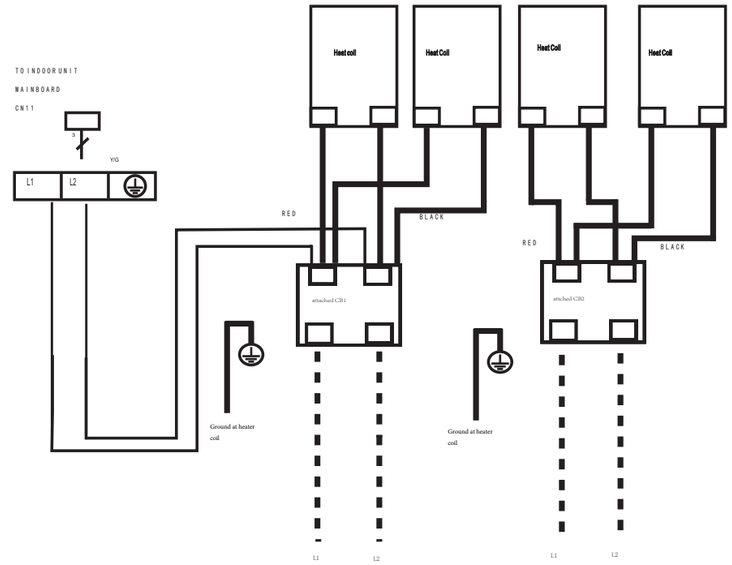

POWER A POWER B

NOTE1:

This symbol indicates the element is

optional, The wiring type of the actual unit shall prevail.

NOTE2:
PLEASE ATTACH THE NAMEPLATE TO THE COVER OF THE ELECTRIC CONTROL BOX. ALL THE ROUND HOLES LOCATED ON THE PLATE REPRESENT NUMBERS. PLEASE REFER TO THE INSTALLATION MANUAL FOR DETAILS.

Round hole number	Relay number	Round hole number	Air switch number
	RELAY1		CB1
	RELAY2		CB2
	RELAY 3		
	RELAY 4		

Disregard Type A below only Type B power is used on BMAH models

IF THE POWER LINE TERMINALS OF AHU IS TYPE A ,THE 'S' TERMINAL MUST BE CONNECTED,FOR TYPE B PLEASE KEEP 'S' TERMINAL DISCONNECTED.

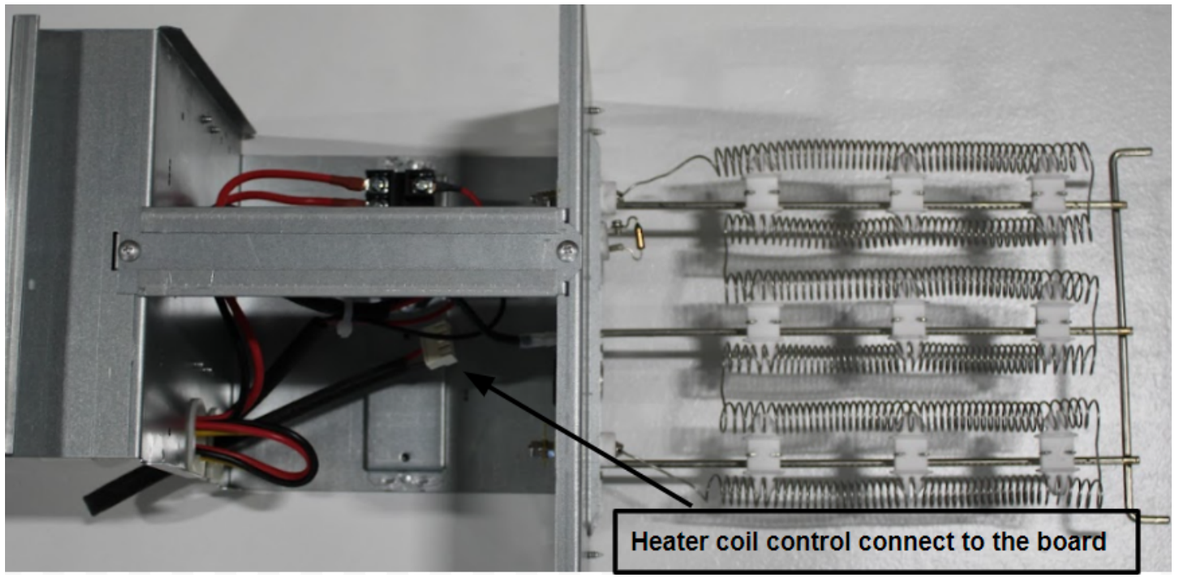

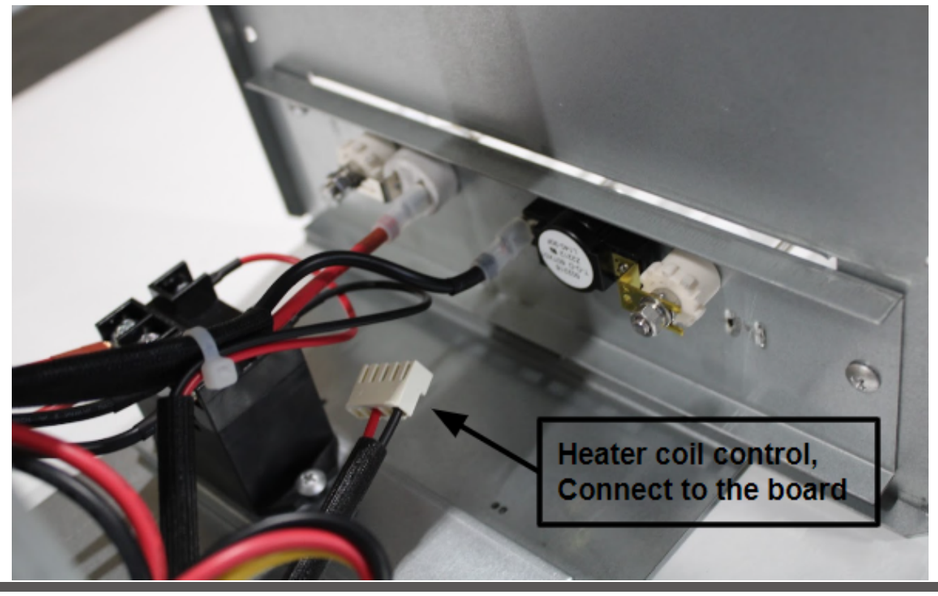

25KW HEAT KIT Only compatible with the 5 ton model

:THERMAL CUT-OUT

:THERMAL LINK, SELF-RESETTING

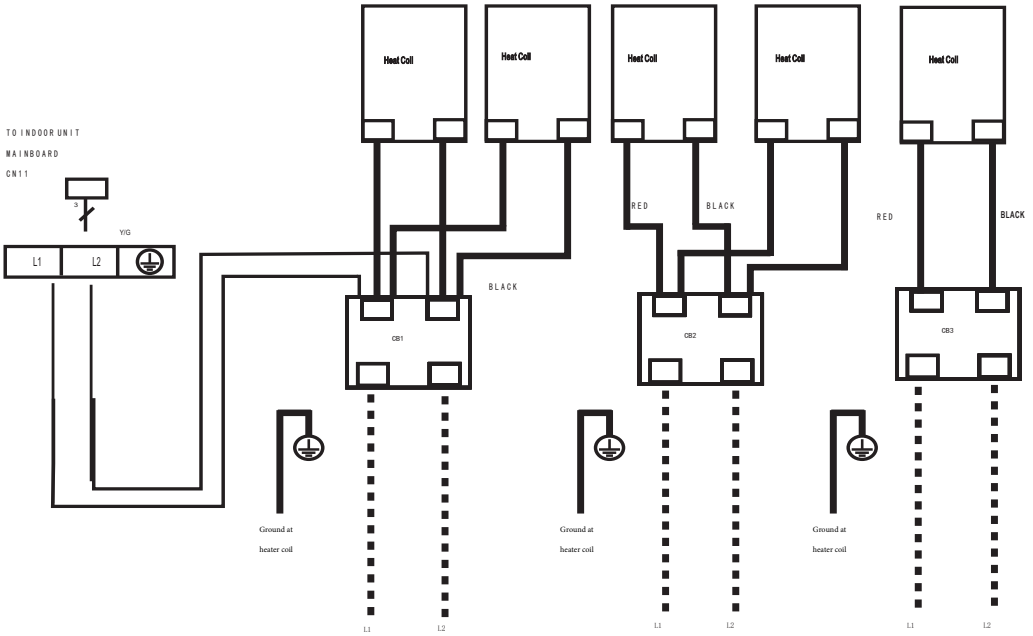

NOTE1:
This symbol indicates the element is optional. The wiring type of the actual unit shall prevail.

NOTE2:
PLEASE ATTACH THE NAMEPLATE TO THE COVER OF THE ELECTRIC CONTROL BOX. ALL THE ROUND HOLES LOCATED ON THE PLATE REPRESENT NUMBERS. PLEASE REFER TO THE INSTALLATION MANUAL FOR DETAILS.

Round hole number	Relay number	Round hole number	Air switch number
	RELAY 1		CB1
	RELAY 2		CB2
	RELAY 3		CB3
	RELAY 4		
	RELAY 5		

Disregard Type A below only Type B power is used on BMAH models

IF THE POWER LINE TERMINALS OF AHU IS TYPE A ,THE 'S' TERMINAL MUST BE CONNECTED,FOR TYPE B PLEASE KEEP 'S' TERMINAL DISCONNECTED.

Outdoor Unit Installation

Install the unit by following local codes and regulations , they may differ slightly between different regions.

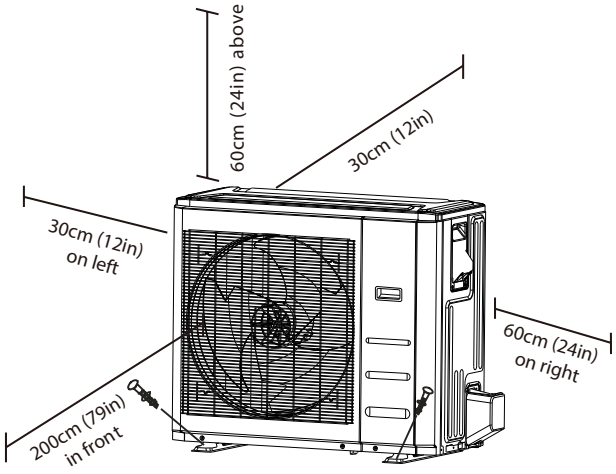

Installation Instructions – Outdoor unit

STEP 1: SELECT INSTALLATION LOCATION

Before installing the outdoor unit, you must choose an appropriate location. The following are standards that will help you choose an appropriate location for the unit.

Proper installation locations meet the following standards:

- ☑ Meets all clearance requirements shown in Installation Space Requirements above.
- ☑ Good air circulation and ventilation
- ☑ Firm and solid foundation—the location can support the unit and will not vibrate
- ☑ Noise from the unit will not disturb others
- ☑ Protected from prolonged periods of direct sunlight or rain
- ☑ Where snowfall is anticipated, take appropriate measures to prevent ice buildup and coil damage.

DO NOT install unit in the following locations:

- ⊘ Near an obstacle that will block air inlets and outlets
- ⊘ Near a public street, crowded areas, or where noise from the unit will disturb others
- ⊘ Near animals or plants that will be harmed by hot air discharge
- ⊘ Near any source of combustible gas
- ⊘ In a location that is exposed to large amounts of dust
- ⊘ In a location exposed to a excessive amounts of salty air

SPECIAL CONSIDERATIONS FOR EXTREME WEATHER

If the unit is exposed to heavy wind:

Install unit so that air outlet fan is at a 90° angle to the direction of the wind. If needed, build a barrier in front of the unit to protect it from extremely heavy winds.
See Figures below.

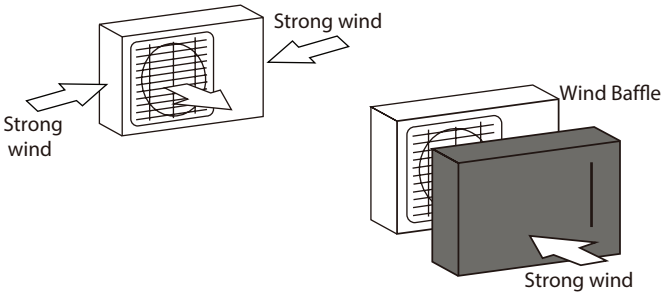

If the unit is frequently exposed to heavy rain or snow:

Build a shelter above the unit to protect it from the rain or snow. Be careful not to obstruct air flow around the unit.

If the unit is frequently exposed to salty air (seaside):

Use outdoor unit that is specially designed to resist corrosion.

STEP 2: INSTALL DRAIN FITTING

Before bolting the outdoor unit in place, you must install the drain fitting at the bottom of the unit. NOTE: There are two different types of drain fitting depending on the type of outdoor unit.

If the drain fitting comes with a rubber seal (see **Fig. A**), do the following:

1. Fit the rubber gasket on the end of the drain fitting that will connect to the outdoor unit.
2. Insert the drain fitting into the hole in the base pan of the unit.
3. Rotate the drain fitting 90° until it clicks in place facing the front of the unit.
4. Connect a drain hose extension (not included) to the drain fitting to redirect water from the unit during heating mode.

If the drain fitting doesn't come with a rubber gasket (see **Fig. B**), do the following:

1. Insert the drain fitting into the hole in the base pan of the unit. The drain fitting will click in place.
2. Connect a drain hose extension (not included) to the drain fitting to redirect water from the unit during heating mode.

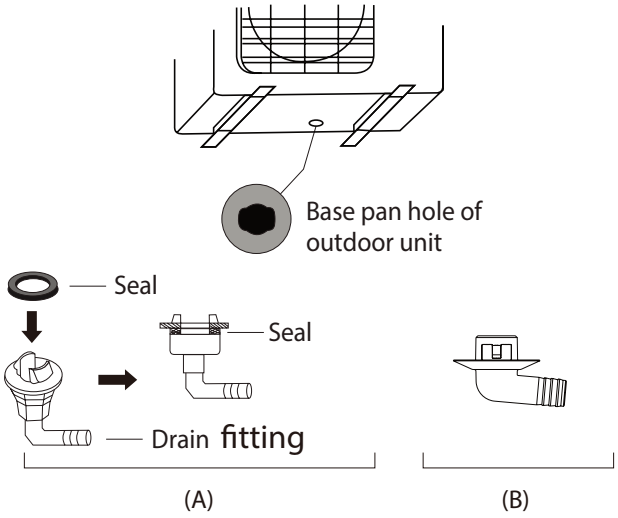

IN COLD CLIMATES

In cold climates, make sure that the drain hose is as vertical as possible to ensure swift water drainage. If water drains too slowly, it can freeze in the hose and flood the unit.

STEP 3: ANCHOR OUTDOOR UNIT

The outdoor unit can be anchored to the ground or to a wall-mounted bracket with bolt(M10). Prepare the installation base of the unit according to the dimensions below.

UNIT MOUNTING DIMENSIONS

The following is a list of different outdoor unit sizes and the distance between their mounting feet. Prepare the installation base of the unit according to the dimensions below.

Outdoor Unit Types and Specifications

Split Type Outdoor Unit

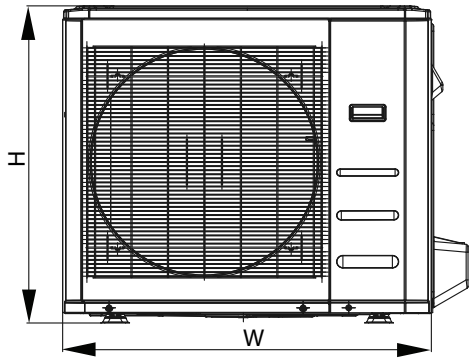

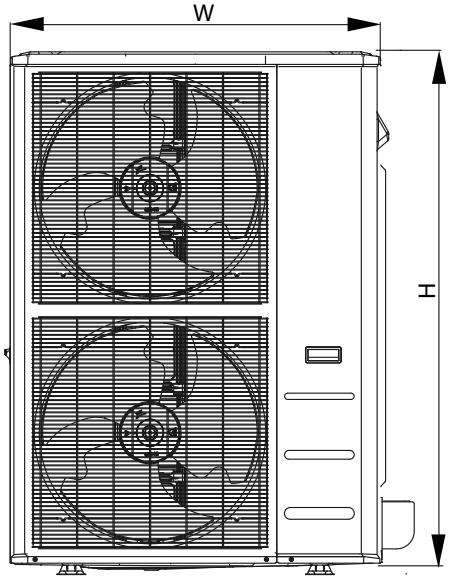

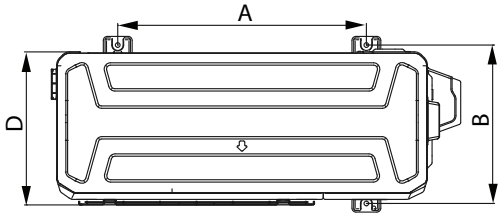

(unit: mm/inch)

Outdoor Unit Dimensions						Mounting Dimensions			
W		H		D		A		B	
mm	inch	mm	inch	mm	inch	mm	inch	mm	inch
805	31-11/16	554	21-13/16	330	13	511	20-1/8	317	12-1/2
890	35	673	26-1/2	342	13-15/32	663	26-1/8	354	13-15/16
946	37-1/4	810	31-29/32	410	16-5/32	673	26-1/2	403	15-7/8
952	37-1/2	1333	52-1/2	415	16-11/32	634	24-35/36	404	15-29/32

Rows of series installation

The relations between H, A and L are as follows.

	L	A
L ≤ H	L ≤ 1/2H	25 cm / 9-13/16in or more
	1/2H < L ≤ H	30 cm / 11-13/16in or more
L > H	Can not be installed	

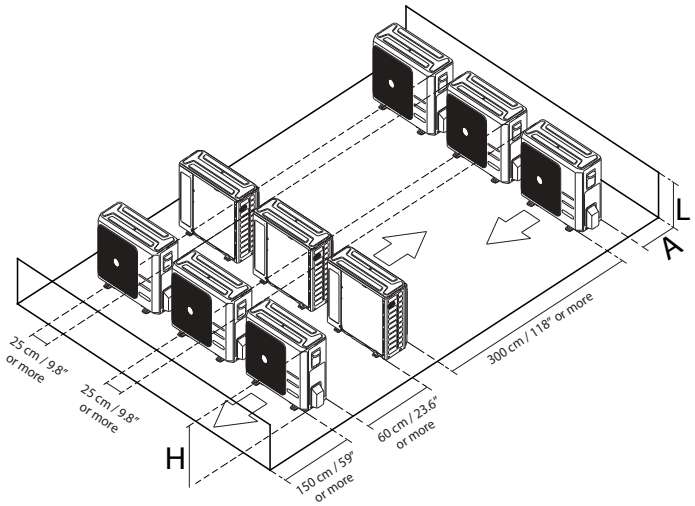

If you will install the unit on the ground or on a concrete mounting platform, do the following:

1. Mark the positions for four expansion bolts based on dimensions chart.
2. Pre-drill holes for expansion bolts.
3. Place a nut on the end of each expansion bolt.
4. Hammer expansion bolts into the pre-drilled holes.
5. Remove the nuts from expansion bolts, and place outdoor unit on bolts.
6. Put washer on each expansion bolt, then replace the nuts.
7. Using a wrench, tighten each nut until snug.

⚠ WARNING

WHEN DRILLING INTO CONCRETE, EYE PROTECTION IS RECOMMENDED AT ALL TIMES.

If you will install the unit on a wall-mounted bracket , do the following:

⚠ CAUTION

Make sure that the wall is made of solid brick, concrete, or of similarly strong material.
The wall must be able to support at least four times the weight of the unit.

1. Mark the position of bracket holes based on dimensions chart.
2. Pre-drill the holes for the expansion bolts.
3. Place a washer and nut on the end of each expansion bolt.
4. Thread expansion bolts through holes in mounting brackets, put mounting brackets in position, and hammer expansion bolts into the wall.
5. Check that the mounting brackets are level.
6. Carefully lift unit and place its mounting feet on brackets.
7. Bolt the unit firmly to the brackets.
8. If allowed, install the unit with rubber gaskets to reduce vibrations and noise.

Wiring

BEFORE PERFORMING ANY ELECTRICAL WORK, READ THESE WARNINGS

1. All wiring must comply with local and national electrical codes, regulations and must be installed by a licensed electrician.
2. All electrical connections must be made according to the Electrical Connection Diagram located on the panels of the indoor and outdoor units.
3. If there is a serious safety issue with the power supply, stop work immediately. Explain your reasoning to the client, and refuse to install the unit until the safety issue is properly resolved.
4. Power voltage should be within 90-110% of rated voltage. Insufficient power supply can cause malfunction, electrical shock, or fire.
5. If connecting power to fixed wiring, a surge protector and main power switch should be installed.
6. If connecting power to fixed wiring, a service disconnect that disconnects all poles and has a contact separation of at least 1/8in (3mm) must be incorporated in the fixed wiring. The qualified technician must use an approved circuit breaker or switch.
7. Only connect the unit to an individual branch circuit outlet. Do not connect another appliance to that circuit.
8. Make sure to properly ground the air conditioner.
9. Every wire must be firmly connected. Loose wiring can cause the terminal to overheat, resulting in product malfunction and possible fire.
10. Do not let wires touch or rest against refrigerant tubing, the compressor, or any moving parts within the unit.
11. If the unit has an auxiliary electric heater, it must be installed at least 1 meter (40in) away from any combustible materials.
12. To avoid getting an electric shock, never touch the electrical components soon after the power supply has been turned off. After turning off the power, always wait 10 minutes or more before you touch the electrical components.
13. Make sure that you do not cross your electrical wiring with your signal wiring. This may cause damage to equipment.
14. Connect the outdoor wires before connecting the indoor wires.

WARNING

BEFORE PERFORMING ANY ELECTRICAL OR WIRING WORK, TURN OFF THE MAIN POWER TO THE SYSTEM.

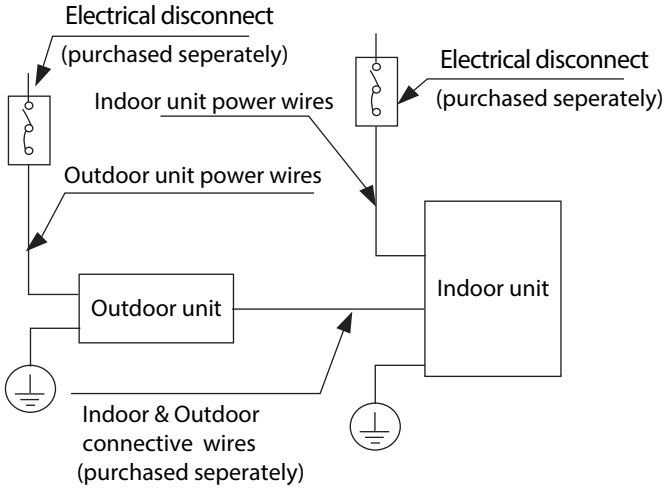

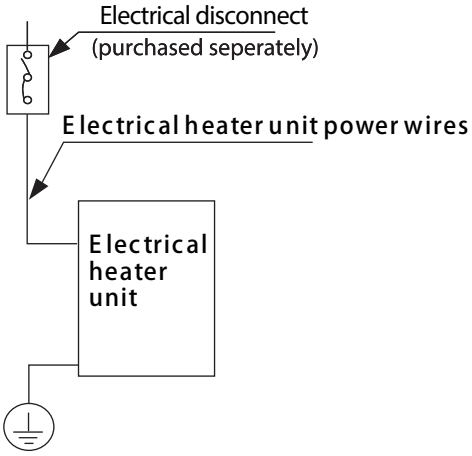

NOTICE

The diagrams are for explanation purpose only. Your machine may be slightly different. The actual diagram shall prevail.

Outdoor Unit Wiring

⚠ WARNING

Before performing any electrical or wiring work, turn off the main power to the system.

1. Prepare the cable for connection
   a. You must first choose the right cable size.

NOTICE

In North America, choose the cable type according to the local electrical codes and regulations. In North America, please choose the right cable size according to the Minimum Circuit Ampacity indicated on the nameplate of the unit.

   b. Using wire strippers, strip the insulating jacketfrom both ends of the signal cable to reveal approximately 15cm (5.9") of wire.
   c. Strip the insulation from the ends.
   d. Using a wire crimper, crimp u-lugs on the ends.

NOTICE

When connecting the wires, strictly follow the wiring diagram found inside the electrical box cover.

2. Remove the electric cover of the outdoor unit. If there is no cover on the outdoor unit, take off the bolts from the maintenance board and remove the protection board.

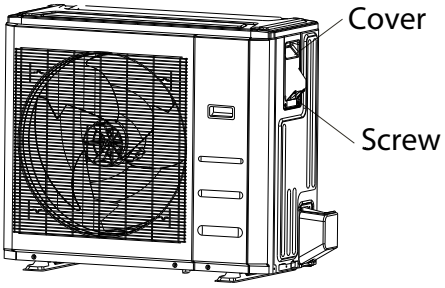

3. Connect the u-lugs to the terminals
   Match the wire colors/labels with the labels on the terminal block. Firmly screw the u-lug of each wire to its corresponding terminal.

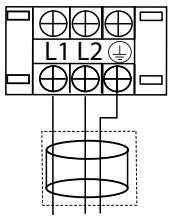

TO POWER SOURCE

Outdoor Unit

4. Clamp down the cable with the cable clamp.
5. Insulate unused wires with electrical tape. Keep them away from any electrical or metal parts.
6. Reinstall the cover of the electric control box.

In North America

1. Remove the wire cover from the unit by loosening the 3 screws.
2. Dismount caps on the conduit panel.
3. Permanently mount the conduit tubes(not included) on the conduit panel.
4. Properly connect both the power supply and low voltage lines to the corresponding terminals on the terminal block.
5. Ground the unit in accordance with local codes.
6. Be sure to size each wire allowing several inches longer than the required length for wiring.
7. Use lock nuts to secure the conduit tubes.

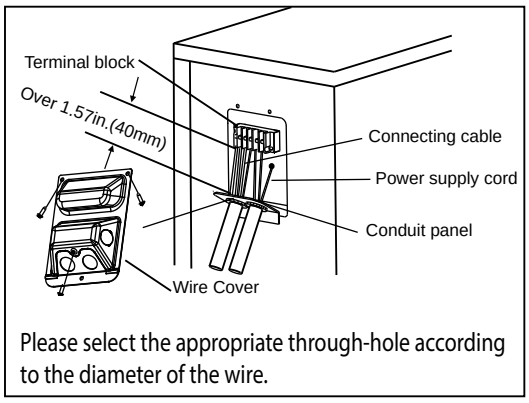

⚠ WARNING

- RISK OF ELECTRIC SHOCK CAN CAUSE INJURY OR DEATH. DISCONNECT ALL REMOTE ELECTRIC POWER SUPPLIES BEFORE SERVICING.

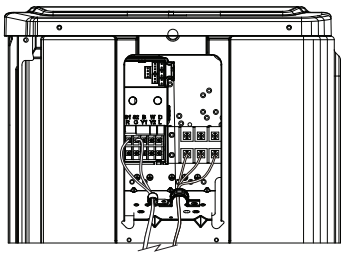

Outdoor Unit

⚠ WARNING

- ISOLATE THE POWER SUPPLY LEADS AND COMMUNICATION LEADS BY THE STRAIN RELIF AND KEEP POWER SUPPLY LEADS AWAY FROM COMMUNICATION LEADS.

Indoor Unit Wiring

1. Prepare the cable for connection.
   a. Using wire strippers, strip the rubber jacket from both ends of the signal cable to reveal about 15cm (5.9”) of the wire.
   b. Strip the insulation from the ends of the wires.
2. Open the front panel of the indoor unit. Using a screwdriver,remove the cover of the electric control box on your indoor unit.
3. Thread the power cable and the signal cable through the wire outlet.
4. Connect the wires to the terminals.
   Match the wire colors/labels with the labels on the terminal block. Firmly screw the wires of each wire to its corresponding terminal. Refer to the Serial Number and Wiring Diagram located on the cover of the electric control box.

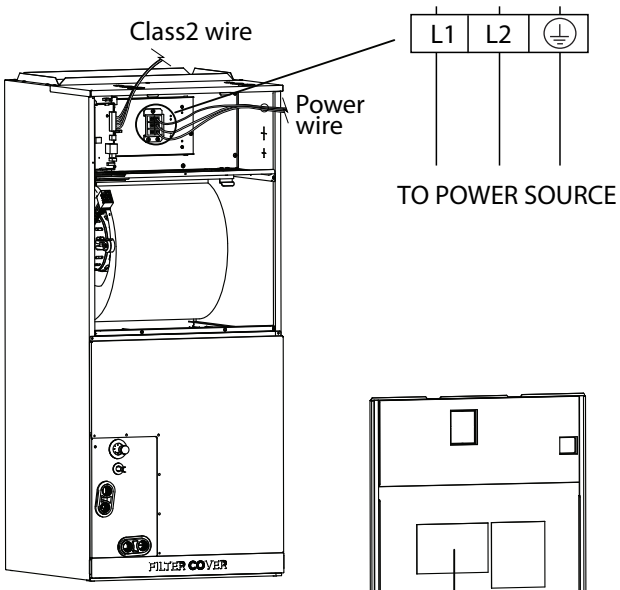

Wiring diagram

Wiring

⚠ CAUTION

- While connecting the wires, please strictly follow the wiring diagram.
- The refrigerant circuit can become very hot. Keep the interconnection cable away from the copper tube.

⚠ WARNING

ISOLATE THE POWER SUPPLY AND COMMUNICATION LEADS AS SHOWN IN THE DIAGRAM,KEEP POWER SUPPLY LEADS AWAY FROM COMMUNICATION LEADS.

5. Clamp down the cable with the cable clamp. The cable must not be loose or pull on the u-lugs.
6. Reattach the electric box cover.

Specific wiring method

Connection method A:

Refer to the wiring method of internal and external machine communication and wired controller as follows: (this is the preferred method to simplify the installation, maintain remote fan controls, and optimize system perfomance)

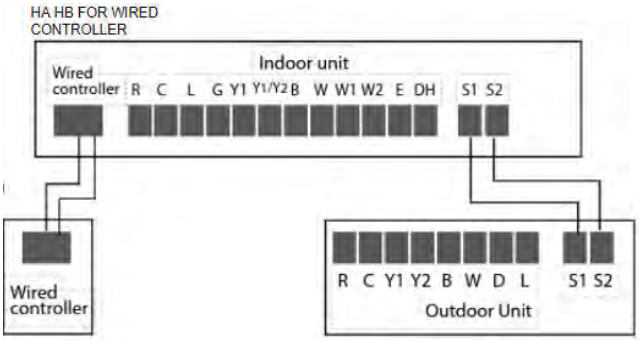

⚠ WARNING

Please refer to the wiring nameplate for the wiring method. Do not connect the power cord to the communication line, as this may damage the system.

Connection method B:

To use a 24V thermostat, you need to refer to the following wiring: (For this method you must use a battery powered thermostat. You lose the ability to adjust the fan speed remotely when connecting to a thermostat)

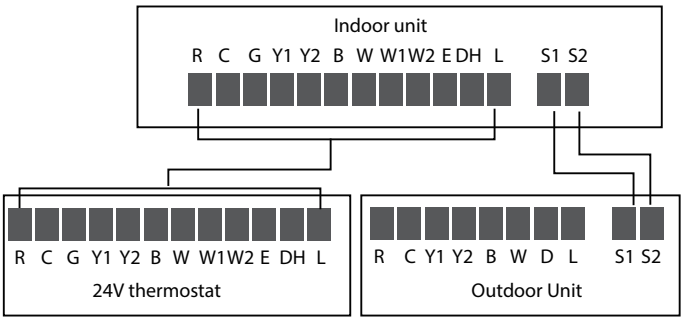

Wiring

When using a 24v thermostat, please refer to the non-communicating wiring diagrams that follow: (For this method you can use a thermostat with C wire connection for power. Wifi and higher end thermostats require C wire connections. Only one fan speed can be connected)

Connection method C: The following wiring diagrams are suitable for the AHU and ODU with 24V thermostat.

Non-communication scheme wiring reference

• Wiring for 4H and 2C thermostat

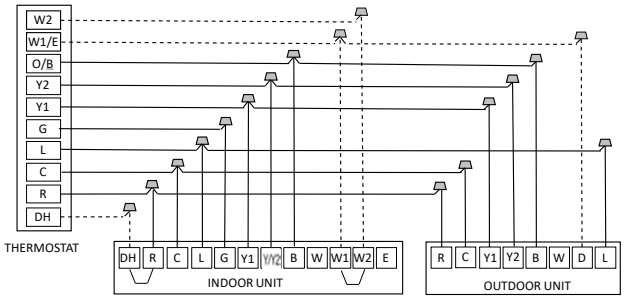

S4-1 DIP switch off
Perform disconnection and short-circuit to achieve partition, control or dehumidification

S4-2 DIP switch off
Disconnect and short circuit to realize heating segment

• Wiring for 3H and 1C thermostat

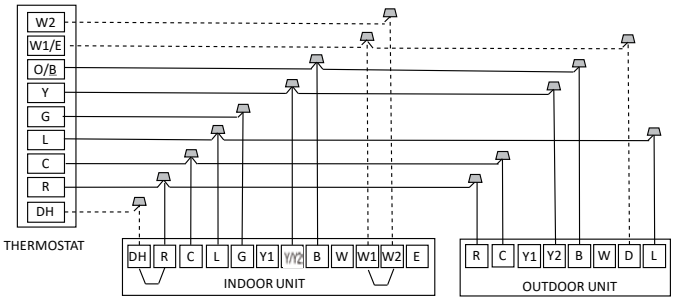

S4-1 DIP switch off
Perform disconnection and short-circuit to achieve partition, control or dehumidification

S4-2 DIP switch off
Disconnect and short circuit to realize heating segment

• Wiring for 3H and 2C thermostat

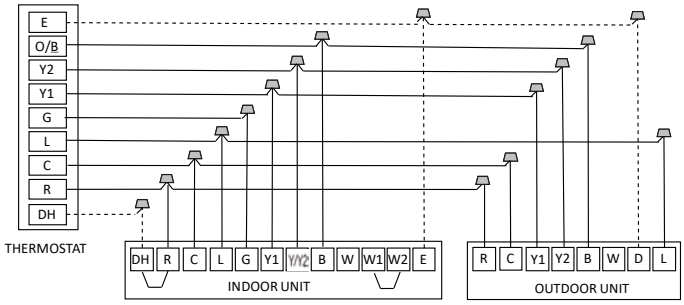

S4-1 DIP switch off
Perform disconnection and short-circuit to achieve partition, control or dehumidification

Emergency heating control two groups of electric heating at the same time

• Wiring for 3H and 2C thermostat

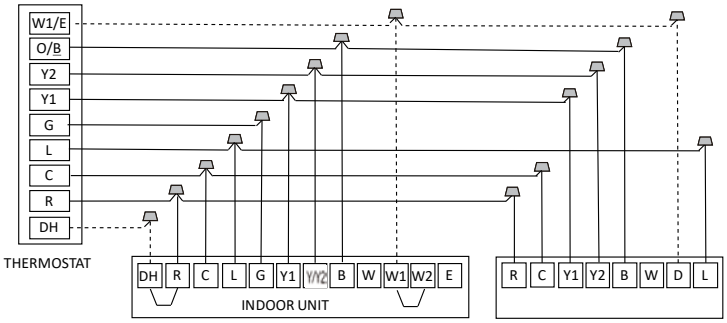

S4-1 DIP switch off
Perform disconnection and short-circuit to achieve partition, control or dehumidification

S4-2 DIP switch off
Disconnect and short circuit to realize heating segment

• Wiring for 2H and 2C thermostat

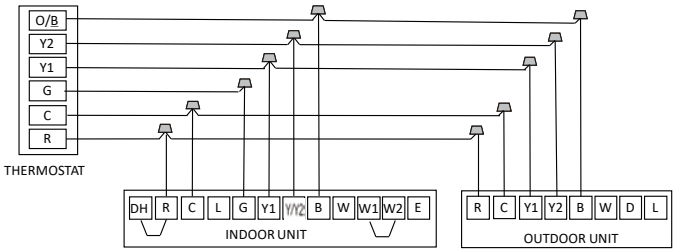

• Wiring for 2H and 1C thermostat

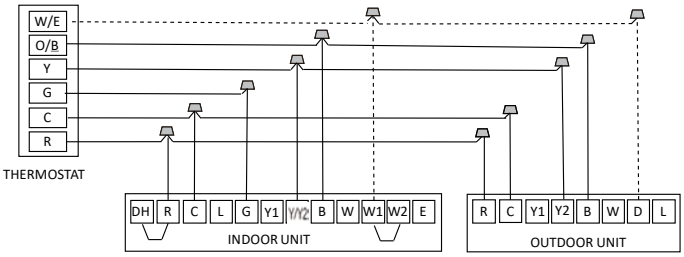

S4-2 DIP switch off
Disconnect and short circuit to realize heating segment

• Wiring for 1H and 1C thermostat

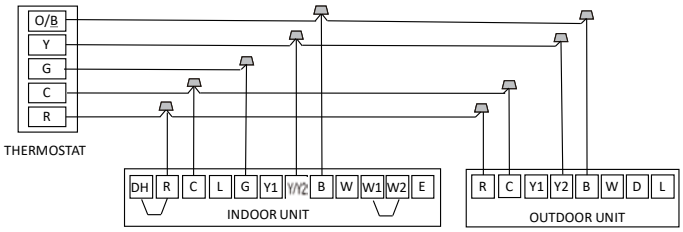

• Wiring for 1H and 1C thermostat

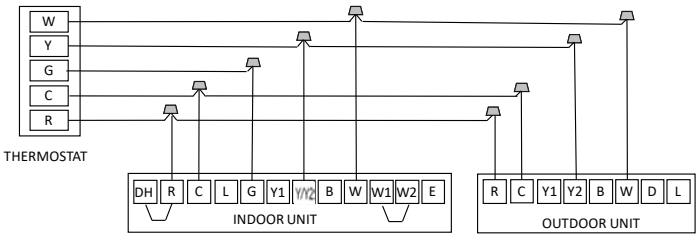

NOTICE

When the system is installed without provided communicating control (Connection Method C), the 24V thermostat L input wire (System Fault Signal) must be used to communicate fault status, thus allowing necessary stop actions to take place in the event of a fault. If a thermostat is not equipped with an L fault input, then Connection Method B should be used.
When Connection Method C is used, the L fault input can be used to control the 24V normally-closed relay contact to disconnect the indoor and outdoor unit control signals as shown in the figure below.

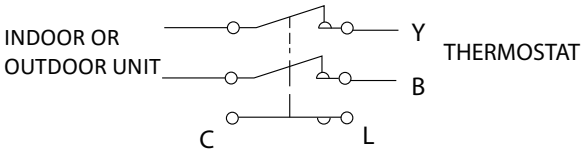

Optional function wiring:

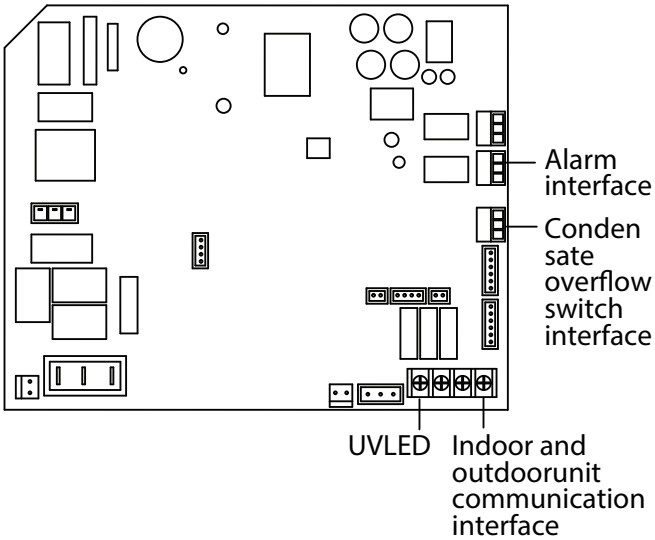

• Condensate overflow switch:

The unit will accommodate a remote condensate overflow switch. To enable, remove jumper J1, and connect the installer provided condensate overflow device to CN5 per below. When an overflow condition is present, the device should open connection signaling the unit to turn off the system.

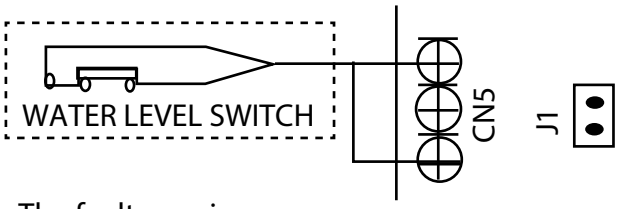

• The fault warning

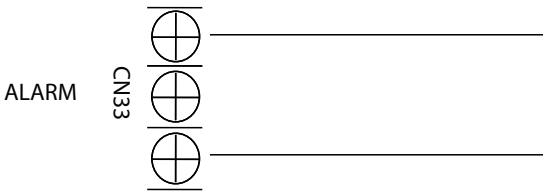

Alarm output:
An alarm output (CN33) can be utilized if actions are required when a fault is present. This is a passive outlet port, so you will need to input a voltage signal. The relay is normally-open for normal operation, and closed when a fault condition is active.

• Humidifier control:

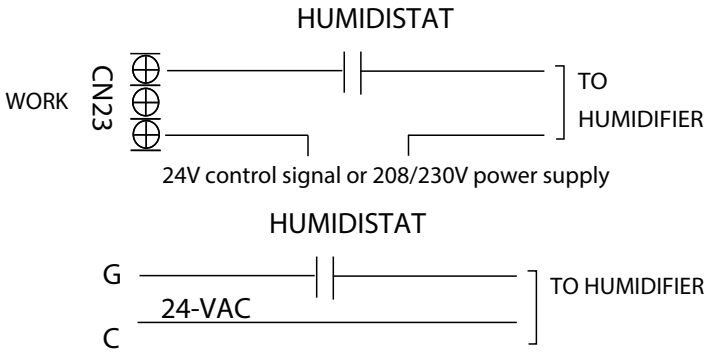

To connect a humidifier, utilize the passive signal "WORK" output (CN23) port as well as the G and C wires on the controller, and wire the humidistat and humidifier per above wiring diagram. When the fan is running, the CN23 relay will be closed, which will allow power to the humidifier when the humidistat is below humidity setpoint. If the thermostat or zone controller has an HUM interface, connect the humidifier directly to the HUM and C ports.

• Dehumidification control wiring

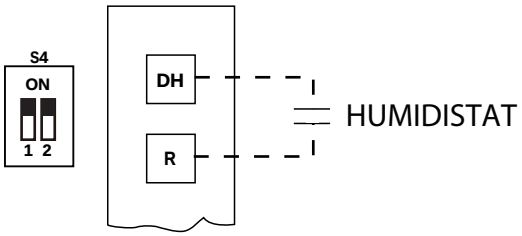

Dehumidification control requires indirect humidifier at DH and R. Set S4-1 as OFF.
When the humidity rises and exceeds the set value of the humidifier, the 24V signal of DH changes to 0V, the cooling system starts the dehumidification operation, and the air volume drops to 80% of the nominal cooling air volume.

When the partition control, DH is connected to the DH port of the partition controller. When the 24V signal of DH changes to 0V, the air volume drops to 80% of the nominal refrigeration air volume.

• UV, fresh air or ion generator wiring

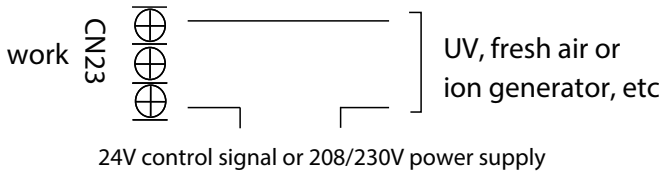

The WORK port is linked with the fan. When the fan is running, the relay is closed; if an active 24V signal is required, it can be directly connected to the G and C ports.

Control Logic

Indoor unit Connector

Connector	Purpose
R	24V Power Connection
C	Common
G	Fan Control
Y1	Low Cooling
Y/Y2	High Cooling
B	Heating Reversing Valve
W	Heating control
W1	Stage 1 Electric Heating
W2	Stage 2 Electric Heating
E/AUX	Emergency Heating
DH/DS/BK	Dehumidification/Zoning control
L	System Fault Signal

Outdoor unit Connector

Connector	Purpose
R	24V Power Connection
C	Common
Y1	Low Cooling
Y2	High Cooling
B	Heating Reversing Valve
W	Heating control
D	Dehumidification control
L	System Fault Signal

LED DISPLAY

The control displays unit status as well as any active fault codes on the LED display. If the unit is functioning normally, the LED will display current temperature setpoint. When a fault code is active, the display will flash quickly the active fault code. Please refer to the fault code table located in the troubleshooting section of the manual for detailed fault code information.

DIP Switch Definitions

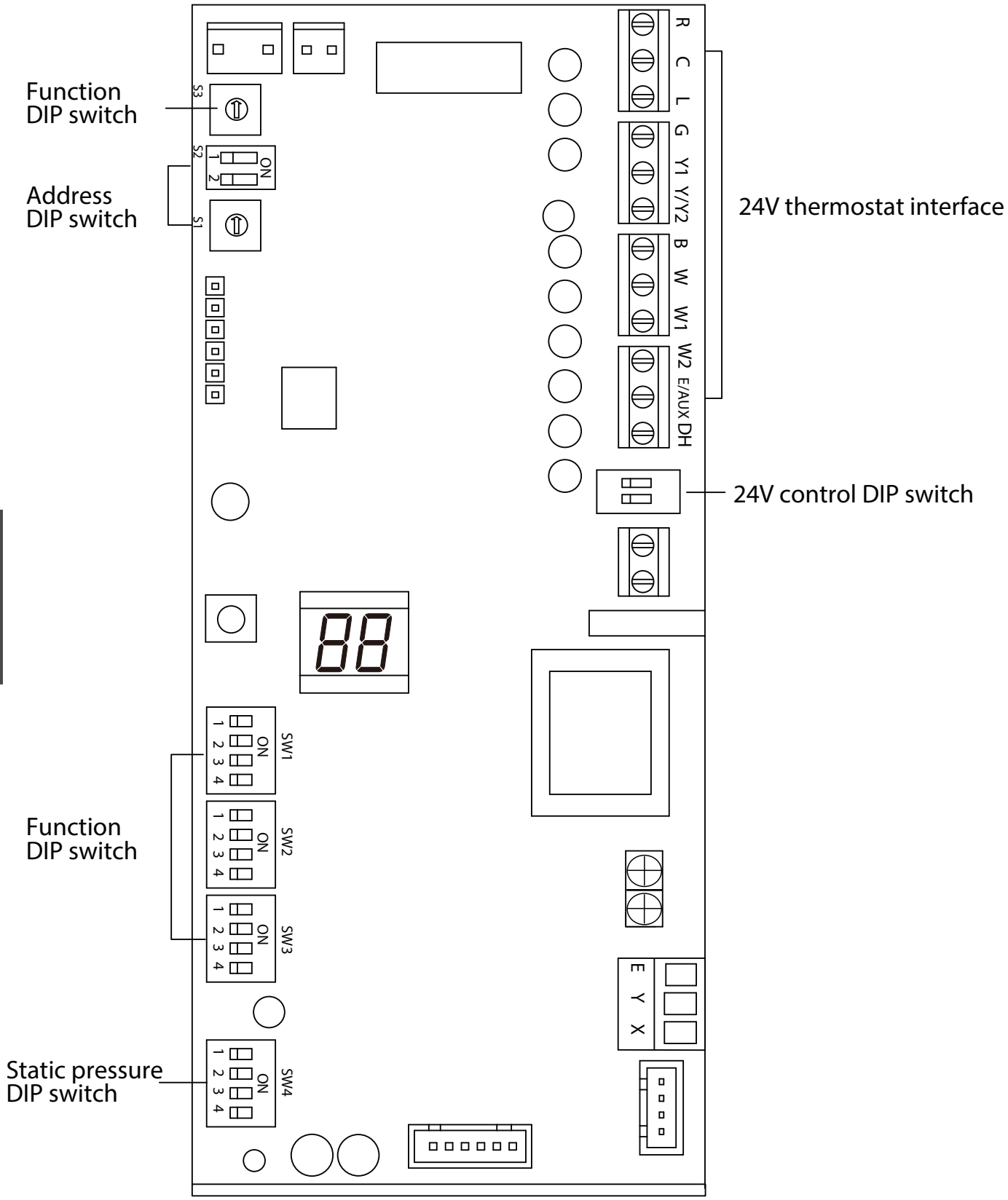

Wiring

Function DIP Switch Settings:

The 24V thermostat mode needs to refer to the following settings

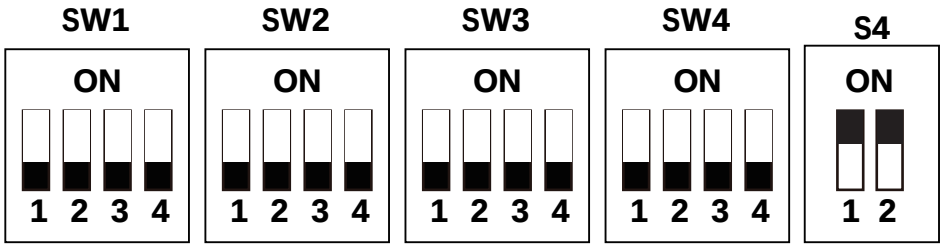

SW4-1	000 is the default 000/001/010/011/100/101/110/111, internal machines with different abilities, electric heating and PSC classification for use
SW4-2	
SW4-3	

Indoor unit dial code

NO.	Dial code	Features	ON	OFF
1	SW1-1	Whether 24V control selection	Yes	NO
2	SW1-2	Cold wind protection option	NO	YES
3	SW1-3	Single cooling / heating and cooling options	Cooling	Cooling & Heating
4	SW1-4	Set machine/single internal machine selection	Indoor unit	Kit
5	SW2-1	The first group controls the electric heating to turn on thetemperature difference	1℃(1.8℉)	2℃(3.6℉)
6	SW2-2	Whether the electric heating is delayed	30 minutes	15 minutes
7	SW2-3	Electric auxiliary heating delaystart time	Yes	NO
8	SW2-4	Electric heating/compressor allow opening limit	Compressor allowed to operate to low limit set by ENC 2	Electric heating allowed to operate to high limit set by ENC
9	SW3-1	Continuous running time when the set temperature of 1℃(1.8℉) is not reached	E-square value (15 minutes)	90 minutes
10	SW3-2	Cooling and heating Y2 signal setting temperature adjustment value A	1℃(1.8℉)	2℃(3.6℉)
11	SW3-3	Hysteresis of the second group of electric heating	2℃(3.6℉)	3℃(5.4℉)
12	ENC2	Electric heating turns on outdoor T4 temperature	0 means that the temperature protection is not turned on, 1-F is -20-8℃ (-4-46℉)respectively, and each scale represents 2℃(3.6℉)	
13	S4-1	Default ON	Short circuit W1 and W2	W1, W2 separate
14	S4-2	Default ON	DH is off by default	DH on

NOTICE: The SW4 DIP switch is only for Certified service technicians to debug and use, please do not touch it.

Outdoor unit dial code

NO.	Dial code	Features	ON	OFF
1	SW-1	Metering Device dial code	Outdoor throttling (normally closed single-way solenoid valve is not powered on)	Indoor throttling (normally closed single-way solenoid valve store)
2	SW-2	Communication dial code	24V communication scheme	485 communication scheme
3	SW-3	Strong cold and strong heat function	The cooling/heating target pressure compensation value is valid	The cooling/heating target pressure compensation value is invalid
4	SW-4	Function to be defined	———	———

Address DIP switch:

Address dialing S1+S2: When the user uses the centralized controller, the address dialing is required.

Network address: The address silkscreen is NET address, which is composed of a 16-bit address rotary code S2 plus a two-digit DIP switch S1 [Set during engineering installation, no network function does not need to be set]
When S2 is 00 (the dialing code is not connected), the network address value is the value of S2;
When S2 is 10 (corresponding to the switch of the hardware connected to the 10K resistor), the network address value is S2 plus 32;

When S2 is 01 (corresponding to the dial code of the 5.1K resistor connected to the hardware is turned on), the network address value is the value of S2 plus 16;
When S2 is 11 (all dialing codes are on), the network address value is the value of S2 plus 48.

Determined by dial code S2 1-10K 2-5.1K

Dial code selection	Website address
ON 1 2	S2 + 48
ON 1 2	S2 + 32
ON 1 2	S2 + 16
ON 1 2	S2

Wiring

Air volume table

Model	000 (default) air volume(CFM)	001 air volume(CFM)	010 air volume(CFM)	011 air volume(CFM)
18K	660	630	600	570
	10KW	10KW 、8KW	8KW	5KW、3KW
24K	880	850	830	800
	15KW	15KW 、8KW	10KW、8KW	5KW、3KW
30K	1100	1040		930
	15KW	15KW 、10KW	10KW、8KW	8KW、5KW
36K	1320	1255	1190	1125
	20KW	15KW	10KW、8KW	8KW、5KW
48K	1760	1675	1580	1490
	20KW	15KW 、10KW	10KW、8KW	8KW
60K	2195	2055	1920	1775
	25KW	20KW 、15KW	15KW、10KW	10KW

NOTICE

The Air volume DIP switch can only change the air volume when the electric heating is turned on, and the air conditioner cooling and heating air volume remains unchanged. If the DIP switch is wrong, the default air volume will be run.

High, medium and low air volume parameters

18K			24K			30K			36K			48K			60K		
Fan speed	Static pressure (Pa/in WC)	Air volume (CFM)	Fan speed	Static pressure (Pa/in WC)	Air volume (CFM)	Fan speed	Static pressure (Pa/in WC)	Air volume (CFM)	Fan speed	Static pressure (Pa/in WC)	Air volume (CFM)	Fan speed	Static pressure (Pa/in WC)	Air volume (CFM)	Fan speed	Static pressure (Pa/in WC)	Air volume (CFM)
Low	0/0	489	Low	0/0	598	Low	0/0	422	Low	0/0	879	Low	0/0	946	Low	0/0	1151
	25/0.1	493		25/0.1	613		25/0.1	705		25/0.1	883		25/0.1	943		25/0.1	1133
	37/0.15	490		37/0.15	625		37/0.15	713		37/0.15	888		37/0.15	942		37/0.15	1136
	50/0.2	488		50/0.2	630		50/0.2	705		50/0.2	892		50/0.2	948		50/0.2	1132
	75/0.3	501		75/0.3	632		75/0.3	708		75/0.3	893		75/0.3	947		75/0.3	1128
	100/0.4	497		100/0.4	635		100/0.4	711		100/0.4	893		100/0.4	940		100/0.4	1134
	125/0.5	495		125/0.5	631		125/0.5	707		125/0.5	892		125/0.5	940		125/0.5	1130
	150/0.6	492		150/0.6	624		150/0.6	704		150/0.6	890		150/0.6	933		150/0.6	1133
	200/0.8	489		200/0.8	614		200/0.8	702		200/0.8	873		200/0.8	925		200/0.8	1126
	250/1.0	488		250/1.0	624		250/1.0	698		250/1.0	826		250/1.0	925		250/1.0	1118
Mid	0/0	524	Mid	0/0	692	Mid	0/0	813	Mid	0/0	1010	Mid	0/0	1155	Mid	0/0	1367
	25/0.1	528		25/0.1	690		25/0.1	811		25/0.1	1001		25/0.1	1156		25/0.1	1358
	37/0.15	532		37/0.15	685		37/0.15	813		37/0.15	1001		37/0.15	1154		37/0.15	1362
	50/0.2	542		50/0.2	695		50/0.2	816		50/0.2	1000		50/0.2	1154		50/0.2	1361
	75/0.3	523		75/0.3	693		75/0.3	815		75/0.3	995		75/0.3	1143		75/0.3	1360
	100/0.4	524		100/0.4	692		100/0.4	811		100/0.4	995		100/0.4	1147		100/0.4	1352
	125/0.5	533		125/0.5	688		125/0.5	809		125/0.5	996		125/0.5	1149		125/0.5	1353
	150/0.6	523		150/0.6	684		150/0.6	801		150/0.6	983		150/0.6	1143		150/0.6	1348
	200/0.8	521		200/0.8	670		200/0.8	807		200/0.8	996		200/0.8	1140		200/0.8	1340
	250/1.0	519		250/1.0	654		250/1.0	801		250/1.0	969		250/1.0	1113		250/1.0	1316
High	0/0	573	High	0/0	752	High	0/0	899	High	0/0	1137	High	0/0	1325	High	0/0	1608
	25/0.1	577		25/0.1	746		25/0.1	895		25/0.1	1123		25/0.1	1328		25/0.1	1590
	37/0.15	580		37/0.15	750		37/0.15	902		37/0.15	1119		37/0.15	1337		37/0.15	1586
	50/0.2	576		50/0.2	756		50/0.2	898		50/0.2	1120		50/0.2	1337		50/0.2	1560
	75/0.3	579		75/0.3	750		75/0.3	900		75/0.3	1112		75/0.3	1330		75/0.3	1561
	100/0.4	574		100/0.4	746		100/0.4	909		100/0.4	1111		100/0.4	1333		100/0.4	1554
	125/0.5	573		125/0.5	741		125/0.5	901		125/0.5	1113		125/0.5	1338		125/0.5	1549
	150/0.6	576		150/0.6	745		150/0.6	908		150/0.6	1101		150/0.6	1335		150/0.6	1545
	200/0.8	577		200/0.8	735		200/0.8	905		200/0.8	1094		200/0.8	1321		200/0.8	1543
	250/1.0	574		250/1.0	714		250/1.0	899		250/1.0	1088		250/1.0	1321		250/1.0	1548

COOLING AND HEATING POWER SPECIFICATIONS

MODEL(Btu/h)			18K	24K	30K
POWER (indoor)		PHASE	1 Phase	1 Phase	1 Phase
		FREQUENCY AND VOLT	208/230V,60Hz 220-230V,60Hz 220-240V,50Hz		
POWER (outdoor)		PHASE	1 Phase	1 Phase	1 Phase
		FREQUENCY AND VOLT	208/230V,60Hz 220-230V,60Hz 220-240V,50Hz		
INPUT CIRCUIT FUSE		INDOOR UNIT(A)	6.3A	6.3A	6.3A
LINES GAUGE	OUTDOOR UNIT POWER LINE	LINE QUANTITY	3	3	5
		LINE DIAMETER(AWG)	12/4.0mm²	12/4.0mm²	12/4.0mm²
	OUTDOOR-INDOOR SIGNAL LINE	LINE QUANTITY	2	2	2
		LINE DIAMETER(AWG)	20/0.5mm²	20/0.5mm²	20/0.5mm²
	THERMOSTAT SIGNAL LINE	LINE QUANTITY	——	——	——
		LINE DIAMETER(AWG)	18/1.0mm²	18/1.0mm²	18/1.0mm²
	INDOOR-OUTDOOR CONNCETION LINE	LINE QUANTITY	——	——	——
		LINE DIAMETER(AWG)	——	——	——

MODEL(Btu/h)			48K	60K
POWER (indoor)		PHASE	1 Phase	1 Phase
		FREQUENCY AND VOLT	208/230V,60Hz 220-230V,60Hz 220-240V,50Hz	
POWER (outdoor)		PHASE	1 Phase	1 Phase
		FREQUENCY AND VOLT	208/230V,60Hz 220-230V,60Hz 220-240V,50Hz	
INPUT CIRCUIT FUSE		INDOOR UNIT(A)	16A	16A
LINES GAUGE	OUTDOOR UNIT POWER LINE	LINE QUANTITY	5	5
		LINE DIAMETER(AWG)	8/8.0mm²	8/8.0mm²
	OUTDOOR-INDOOR SIGNAL LINE	LINE QUANTITY	2	2
		LINE DIAMETER(AWG)	20/0.2mm²	20/0.2mm²
	THERMOSTAT SIGNAL LINE	LINE QUANTITY	——	——
		LINE DIAMETER(AWG)	18/1.0mm²	18/1.0mm²
	INDOOR-OUTDOOR CONNCETION LINE	LINE QUANTITY	——	——
		LINE DIAMETER(AWG)	——	——

AIR EVACUATION

Preparations and Precautions

Air and foreign matter in the refrigerant circuit can cause abnormal rises in pressure, which can damage the air conditioner, reduce its efficiency, and cause injury. Use a vacuum pump and manifold gauge to evacuate the refrigerant circuit, removing any non-condensable gas and moisture from the system.

Evacuation should be performed upon initial installation and when unit is relocated.

BEFORE PERFORMING EVACUATION

- ☑ Check to make sure the connective pipes between the indoor and outdoor units are connected properly .
- ☑ Check to make sure all wiring is connected properly.

Evacuation Instructions

1. Connect the charge hose of the manifold gauge to service port on the outdoor unit's low pressure valve.
2. Connect another charge hose from the manifold gauge to the vacuum pump.
3. Open the Low Pressure side of the manifold gauge. Keep the High Pressure side closed.
4. Turn on the vacuum pump to evacuate the system.
5. Run the vacuum for at least 15 minutes, or until the Compound Meter reads 750 micron (-10^5Pa).

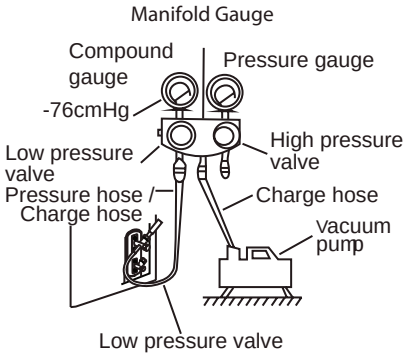

6. Close the Low Pressure side of the manifold gauge, and turn off the vacuum pump.
7. Wait for 5 minutes, then check that there has been no change in system pressure.
8. If there is a change in system pressure, refer to Gas Leak Check section for information on how to check for leaks. If there is no change in system pressure, unscrew the cap
9. from the packed valve (high pressure valve). Insert hexagonal wrench into the packed valve (high pressure valve) and open the valve by turning the wrench in a 1/4 counterclockwise turn. Listen for gas to exit the system, then close the valve after 5 seconds.
10. Watch the Pressure Gauge for one minute to make sure that there is no change in pressure. The Pressure Gauge should read slightly higher than atmospheric pressure.
11. Remove the charge hose from the service port.

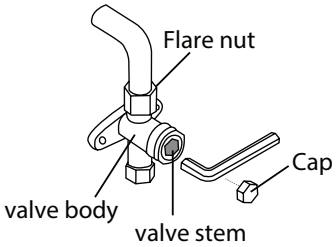

12. Using hexagonal wrench, fully open both the high pressure and low pressure valves.
13. Tighten valve caps on all three valves (service port, high pressure, low pressure) by hand. You may tighten it further using a torque wrench if needed.

! OPEN VALVE STEMS GENTLY

When opening valve stems, turn the hexagonal wrench until it hits against the stopper. Do not try to force the valve to open further.

Note on Adding Refrigerant

Some systems require additional charging depending on pipe lengths. The standard pipe length varies according to local regulations. For example, in North America, the standard pipe length is 7.5m (25'). In other areas, the standard pipe length is 5m (16'). The refrigerant should be charged from the service port on the outdoor unit's low pressure valve. The additional refrigerant to be charged can be calculated using the following formula:

	Liquid Side Diameter		
	ϕ6.35(1/4")	ϕ9.52(3/8")	ϕ12.7(1/2")
R410A: (metering device in the indoor unit)	(Total pipe length - standard pipe length) x30g(0.32oZ)/m(ft)	(Total pipe length - standard pipe length) x65g(0.69oZ)/m(ft)	(Total pipe length - standard pipe length) x115g(1.23oZ)/m(ft)
R410A: (metering device in the outdoor unit)	(Total pipe length - standard pipe length) x15g(0.16oZ)/m(ft)	(Total pipe length - standard pipe length) x30g(0.32oZ)/m(ft)	(Total pipe length - standard pipe length) x65g(0.69oZ)/m(ft)
R32 :	(Total pipe length - standard pipe length)x 12g(0.13oZ)/m(ft)	(Total pipe length - standard pipe length)x 24g(0.26oZ)/m(ft)	(Total pipe length - standard pipe length)x 40g(0.42oZ)/m(ft)

CAUTION **DO NOT** mix refrigerant types.

TEST RUN

Before Test Run

A test run must be performed after the entire system has been completely installed. Confirm the following points before performing the test:

a) Indoor and outdoor units are properly installed.
b) Piping and wiring are properly connected.
c) No obstacles near the inlet and outlet of the unit that might cause poor performance or product malfunction.
d) Refrigeration system does not leak.
e) Drainage system is unimpeded and draining to a safe location.
f) Heating insulation is properly installed.
g) Grounding wires are properly connected.
h) Length of the piping and additional refrigerant stow capacity have been recorded.
i) Power voltage is the correct voltage for the air conditioner.

⚠ CAUTION

Failure to perform the test run may result in unit damage, property damage, or personal injury.

Test Run Instructions

1. Open both the liquid and gas service valves.
2. Turn on the main power switch and allow the unit to warm up.
3. Set the air conditioner to COOL mode.
4. For the Indoor Unit
   a. Double check to see if the room temperature is being registered correctly.
   b. Ensure the manual buttons on the indoor unit works properly.
   c. Check to see that the drainage system is unimpeded and draining smoothly.
   d. Ensure there is no vibration or abnormal noise during operation.
5. For the Outdoor Unit
   a. Check to see if the refrigeration system is leaking.
   b. Make sure there is no vibration or abnormal noise during operation.
   c. Ensure the discharged air, noise, and water generated by the unit do not disturb your neighbors or pose a safety hazard.
6. Drainage Test
   a. Ensure the drainpipe flows smoothly. New buildings should perform this test before finishing the ceiling.
   b. Turn on the main power switch and run the air conditioner in COOL mode.
   c. Check to see that the water is discharged. It may take up to one minute before the unit begins to drain depending on the drainpipe.
   d. Make sure that there are no leaks in any of the piping.
   e. Stop the air conditioner. Turn off the main power switch and reinstall the test cover.

NOTICE

If the unit malfunctions or does not operate according to your expectations, please refer to the Service Manual before calling customer service.