SUBMITTAL DATA SHEET

MSAGF-30HRFN1-MT0W/MOD30U-30HFN1-M(GA) **30,000 BTU/H(208/230V) Wall Mounted Heat Pump System**

Location: _____
Engineer: _____
Submitted to: _____
Submitted by: _____
Reference: _____

Approval: _____
Date: _____
Construction: _____
Unit #: _____
Drawing #: _____

Set Code	22022010018179
Indoor unit code	22022011017841
Outdoor unit code	22023116000221
Set Model	
Indoor unit model	BMY3020WM
Outdoor unit model	BMY3021C
Ceritified	**AHRI**
	UL

SYSTEM PERFORMANCE DATA

Power supply		
Normal Operational Voltage	(V, Ph, Hz)	208/230, 1, 60
Voltage Range	(V)	187-253
Electrical		
Minimum circuit ampacity	(A)	25
Max.fuse	(A)	30
Connection wiring		14*4 AWG
Cooling		
Rated Capacity	(Btu/h)	30000
Capacity Range	(Btu/h)	8200~30670
Powrer Input (Max)	(W)	2455
Rated current	(A)	10.7
SEER	(Btu/W)	21
EER	(Btu/W)	12.2
Heating at 47F		
Rated Capacity	(Btu/h)	30000
Capacity Range	(Btu/h)	11800~30800
Powrer Input (Max)	(W)	3200
Rated current	(A)	13.9
HSPF4	(Btu/W)	10.5
HSPF5	(Btu/W)	8.9
COP	W/W	2.75
Heating at 17F		
Max Capacity	(Btu/h)	21100

REFRIGERANT PIPE DATA

Design pressure	(PSIG)	550/340
Refrigerant Type	(Oz)	R410A/98.77
Refrigerant precharge	(ft)	25.0
	(m)	7.6
Additional charge for each	(oz/ft)	0.32
	(g/ft)	30
Liquid side/ Gas side	(inch)	3/8" / 5/8"
	(mm)	Φ9.52 / Φ15.9
Max. pipe length	(ft)	164.0
	(m)	50.0
Max. difference in level	(ft)	82.0
	(m)	25.0
Connection method		(Flared)
Indoor(cooling)	(Deg. ℉/ °C)	60～90 / 16～32
Indoor(heating)	(Deg. ℉/ °C)	32～86 / 0～30
Outdoor(cooling)	(Deg. ℉/ °C)	5~122 / -15～50
Outdoor(heating)	(Deg. ℉/ °C)	5~75 / -15～24

INDOOR UNIT DATA

Indoor fan motor		
Type		Cross-Flow
Model		
Qty		ZKFP-58-8-1-5
Input	(W)	
RLA	(A)	0.5
LRA	(A)	---
Winding Resistance	(Ω)	---
Capacitor	(uF)	---
Speed(Hi/Mi/Lo)	(r/min)	1200/1050/950
Air flow & Noise level		
Indoor air flow (Hi/Med/Lo)	(CFM)	701.76/535.88/380.00
Indoor noise level (Hi/Med/	[dB(A)]	50.5/45.5/39.5
Dehumidification	(Pint/H)	---
Indoor unit		
Dimension (WxDxH)	(inch)	49.57x11.14x14.25
	(mm)	1259x283x362
Packing(WxDxH)	(inch)	52.76x17.72x15.16
	(mm)	1340x450x385
Net/Gross weight	(lbs.)	42.99/55.56
	(kg)	19.5/25.2

OUTDOOR UNIT DATA

Compressor		
Type		KTF250D22UMT
Model		ROTARY
Brand		GMCC
Capacity	(Btu/h)	8095
Input	(W)	2200
Rated current (RLA)	(A)	15
Refrigerant oil/oil charge	(ml)	/
Throttle		Capillary +EXV
Outdoor fan motor		
Model		ZKFN-120-8-2
Qty		
Input	(W)	--
RLA	(A)	--
Speed	(r/min)	900/700/500
Air flow & Noise level		
Outdoor air flow (Max.)	(CFM)	2235.29
Outdoor noise level	[dB(A)]	63
Outdoor unit		
Dimension (W×D×H)	(inch)	37.24x16.14x31.89
	(mm)	946x410x810
Packing (W×D×H)	(inch)	42.91x19.69x34.84
	(mm)	1090x500x885
Net/ Gross weight	(lbs.)	142.86/152.56
	(kg)	64.8/69.2

Indoor unit dimension

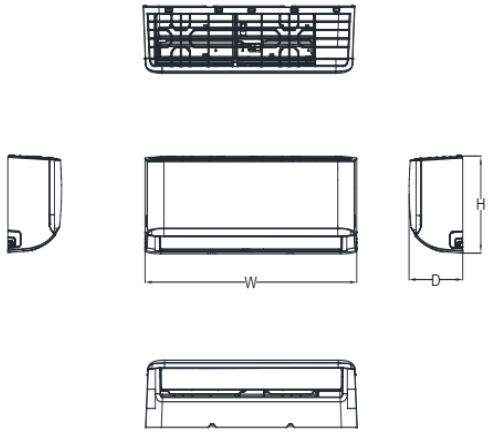

Capacity	Body Code	W(mm/inch)	D(mm/inch)	H(mm/inch)
6K~11K	A	729/28.7	200/7.87	292/11.5
8K~14K	B	802/31.57	200/7.87	295/11.61
12K~21K	C	971/38.23	228/8.98	321/12.64
18K~28K	D	1082/42.6	234/9.21	337/13.27
27K~36K	F	1259/49.57	283/11.14	362/14.25

Outdoor unit dimension

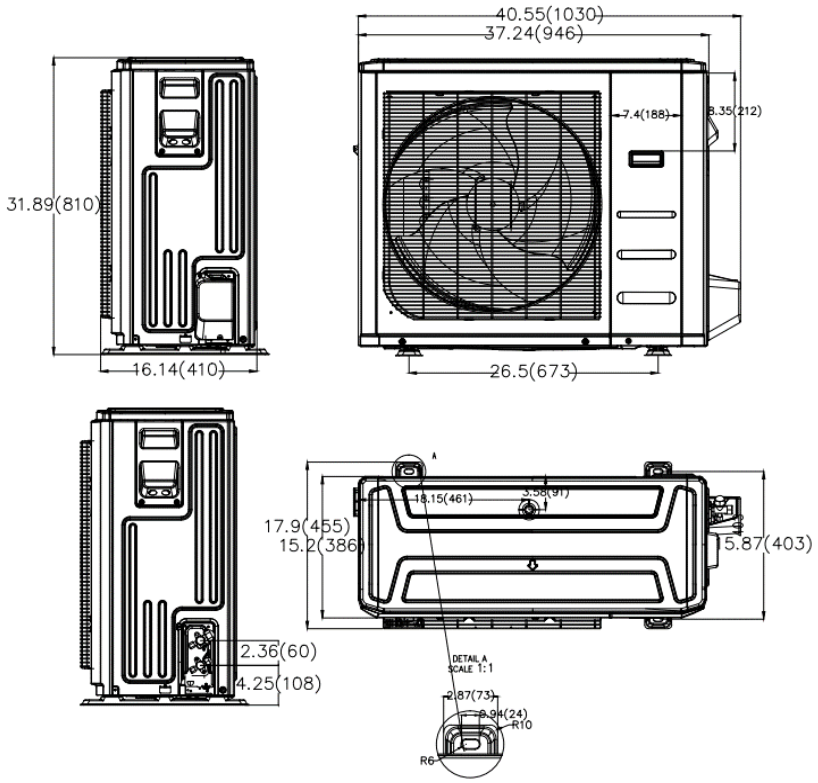

General Features

Wireless Remote with LCD Display
46F Heating
Sleep Mode
Silent Mode
Self Clean
Follow Me (optional)

Extended Peformance Data