REVISIONS				
REV.	DESCRIPTION	DRAWN BY	APPR BY	APPR DATE

NOTES:
1. MATERIAL: SEE COMPONENT DRAWINGS
2. ALL BENDS SHOULD ASSUME 0.03 INCH RADIUS UNLESS OTHERWISE NOTED.
3. COLOR: SEE COMPONENT DRAWINGS
4. FINISH: SEE COMPONENT DRAWINGS
5. PRE-TREATMENT: SEE COMPONENT DRAWINGS

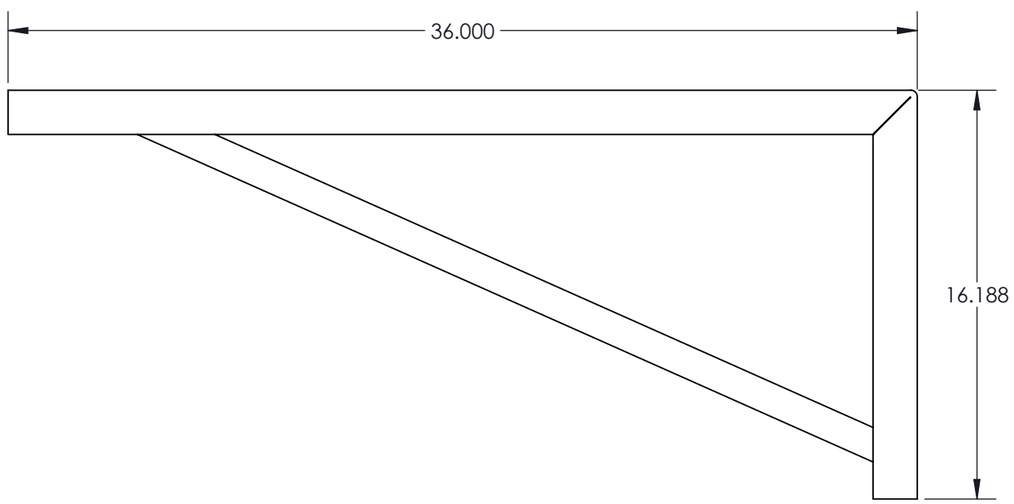

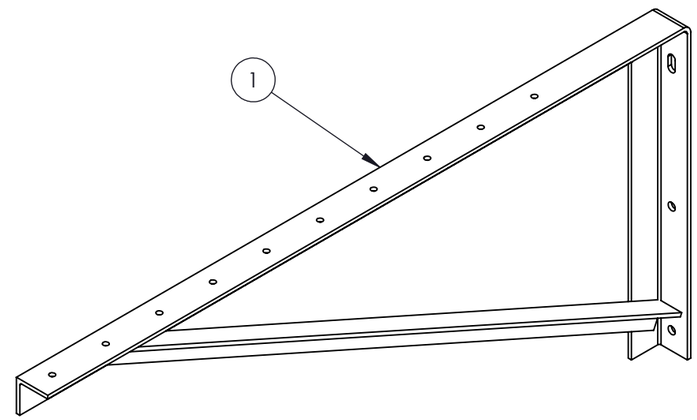

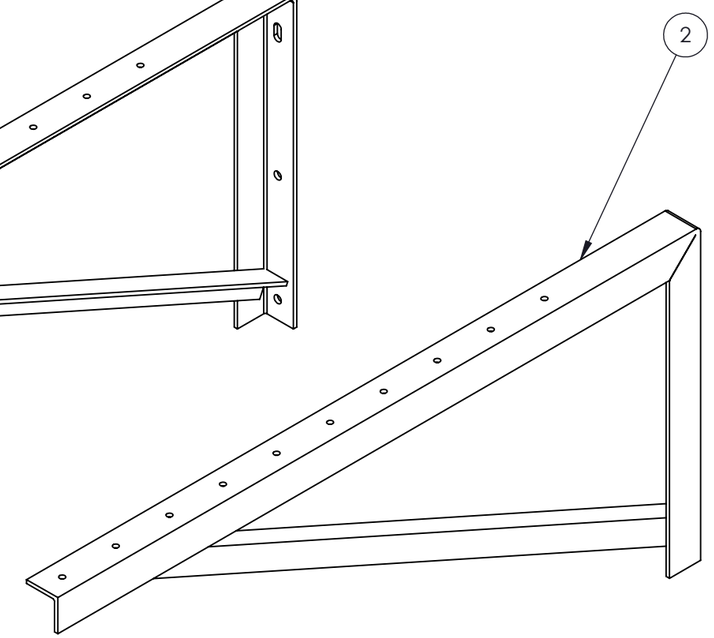

NOTE:
THE UNIT MUST BE ABLE TO WITHSTAND A CENTERED, STATIC LOAD OF 1250 LBS (SEE TESTING SPEC)

ITEM NO.	PART NUMBER	DESCRIPTION	QTY.
1	ACB-36L AL	ACB-36L Aluminum	1
2	ACB-36R AL	ACB-36R Aluminum	1

ALL DRAWINGS AND WRITTEN MATERIAL CONTAINED HEREIN ARE THE PROPERTY OF DIVERSITECH CORP AND MAY NOT BE DUPLICATED OR DISCLOSED AT ANY TIME UNLESS APPROVED IN WRITING BY DIVERSITECH CORP

INTERPRET THIS DRAWING IN ACCORDANCE WITH ASME Y14.5-2009 DIMENSIONING AND TOLERANCING STANDARDS

UNLESS OTHERWISE SPECIFIED DIMENSIONS & TOLERANCES ARE IN **INCHES**

DIM RANGE	TOLERANCE
0.02 - 0.12	±0.008
0.12 - 0.24	±0.012
0.24 - 1.18	±0.020
1.18 - 4.72	±0.031
4.72 - 15.75	±0.047
15.75 - 39.4	±0.079
39.4 +	±0.118

DEBURR ALL SHARP EDGES

DO NOT SCALE

THIRD ANGLE PROJECTION

DIVERSITECH

	NAME	DATE
DRAWN BY	apadilla	13 Sep 19
CAD APPR.	apadilla	19 Sep 19
DWG APPR.	dschlender	01 Oct 19

TITLE	SIZE
ACB-36 Aluminum	B

DRAWING NUMBER	REVISION
ACB-36-AL	**A**
SCALE: 1:1	SHEET 1 OF 1

QS-B-260819-0