HVAC HEATING PRODUCTS

Application Manual



XH Series

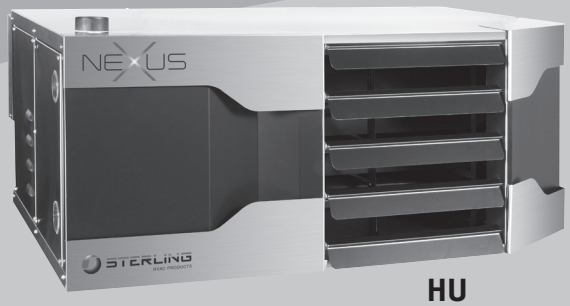

HU Series



XF/XC Series



GG Series

GAS-FIRED HEATING EQUIPMENT

• High Efficiency Unit Heaters • Tubular Unit Heaters • Duct Furnaces • Cabinet Blowers

STERLING HVAC PRODUCTS

MADE IN THE USA

Unit Heaters



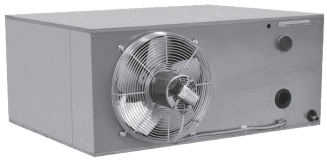

XH Series

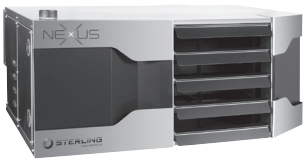



HU Series





GG Series



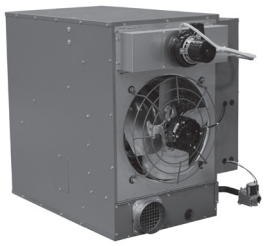

XF Series



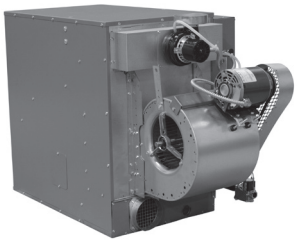

XC Series

Contents

	PAGE
APPLICATIONS	3
XH SERIES	4 – 7
HU SERIES	8 – 11
GG SERIES	12 – 15
XF/XC SERIES	16 – 19
TD SERIES	20 – 23
QVED/QVES/QVSD SERIES	24 – 28

	PAGE
CAB SERIES	29 – 31
OPTIONAL ACCESSORIES – All Series	32 – 33
HEAT THROW DATA – All Series	34 – 35
NOZZLE DIMENSION	36
TYPICAL STANDARD SPECIFICATIONS	37 – 38
WARRANTY – All Series	39

Applications

UNIT HEATER PLACEMENT

Gas-fired unit heaters are used primarily in commercial and industrial buildings such as warehouses, manufacturing areas, garages, showrooms, lobbies, etc. Placement is typically determined by air distribution requirements. Proper distributions should have air directed toward areas of greatest heat loss. Multiple units may be used to greatest effect by positioning units around the perimeter. Several units near the center and with air discharging toward outside walls may also satisfy the heating requirements. Direct air discharge on occupants should be avoided.

TYPICAL APPLICATIONS

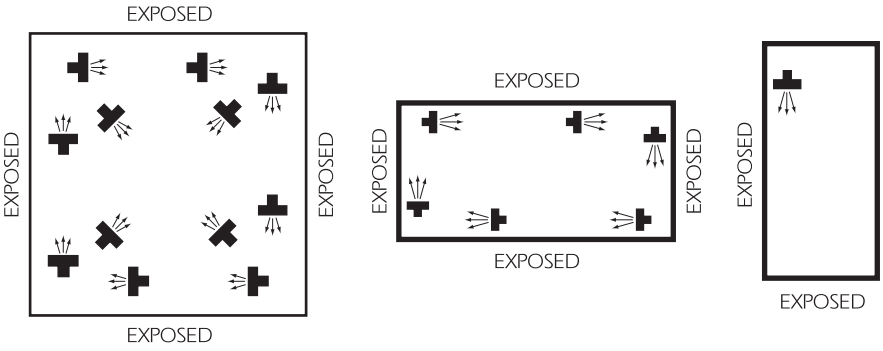

A large square area with exposed walls and roof; units are blanketing all exposed surfaces.

A narrow area with four exposed walls either with or without roof exposure.

A small area with exposed walls requiring one unit.

HOW TO CALCULATE HEAT LOSS

It is suggested that when calculating heat loss for a building, reference be made to procedures outlined in the **ASHRAE Handbook.** As an easy reference, however, the following abbreviated method may be used with a good degree of reliability.

1. Determine inside temperature to be maintained and the design outside temperature for your locality. The difference between these two figures is the design temperature difference.
2. Calculate net areas in square feet of glass, wall, floor, and roof exposed to outside temperature or unheated spaces. Calculate door as all glass.
3. Select heat-transfer coefficients from the table below (or the **ASHRAE Handbook**) and compute the heat-transmission loss for each area in BTU/HR by multiplying each area by the heat-transfer coefficient and the temperature difference.
4. Add 10% to the heat-loss figures for areas exposed to prevailing winds.
5. Calculate the volume of the room or area in cubic feet and multiply by the estimated number of air changes per hour due to infiltration (usually from one to two). Determine the number of cubic feet per hour of air exhausted by ventilating fans or industrial processes. Substitute the larger of these two figures in the formula to determine the heat required to raise the air from outside to room temperature —

$$\frac{\text{BTU/HR} = \text{cubic feet per hour} \times \text{temperature difference}}{55}$$

6. The totals of BTU/HR losses from 3, 4 and 5 (above) will give the total BTU/HR to be supplied by unit heaters. (Note: If processes performed in the room liberate considerable amounts of heat, this may be determined as accurately as possible and subtracted from the total).

Building Material	"U" Factor
WALLS	
Poured concrete 80#/cu. feet	
8-inch	0.25
12-inch	0.18
Concrete Block, hollow cinder aggregate	
8-inch	0.39
12-inch	0.36
Gravel aggregate	
8-inch	0.52
12-inch	0.47
Concrete Block, w/4-inch facebrick	
Gravel, 8-inch	0.41
Cinder, 8-inch	0.33
Metal	
(un-insulated)	1.17
w/1-inch blanket insulation	0.22
w/3-inch blanket insulation	0.08
ROOFING	
Corrugated Metal (un-insulated)	1.50
w/1-inch bolt or blanket	0.23
w/1-1/2-inch bolt or blanket	0.16
w/3-inch bolt or blanket	0.08
Flat Metal	
w/3/8-inch built-up roofing	0.90
w/1-inch blanket insulation under deck	0.21
w/2-inch blanket insulation under deck	0.12
Wood/ 1" /(un-insulated)	
w/3/8-inch built-up roofing	0.48
w/1-inch blanket insulation	0.17
Wood/ 2" /(un-insulated)	
w/3/8-inch built-up roofing	0.32
w/1-inch blanket insulation	0.15
Concrete slab/ 2" /(un-insulated)	
w/3/8-inch built-up roofing	0.30
w/1-inch insulation board	0.16
Concrete slab/ 3" /(un-insulated)	
w/ 3/8-inch built-up roofing	0.23
w/1-inch insulation board	0.14
Gypsum slab/ 2" /(un-insulated)	
w/1/2-inch gypsum board	0.36
w/1-inch insulation board	0.20
Gypsum slab/ 3" /(un-insulated)	
w/ 1/2-inch gypsum board	0.30
w/1-inch insulation board	0.18
WINDOWS	
Vertical, single-glass	1.13
Vertical, double-glass, 3/16- inch air space	0.69
Horizontal, single-glass (sky light)	1.40
DOORS	
Metal — single sheet	1.20
Wood, 1-inch	0.64
2-inch	0.43

XH Series — High Efficiency Unit Heater

General Information

DESCRIPTION
The Matrix high efficiency condensing unit heater is the latest in Sterling HVAC's successful unit heater offering and features the ultimate combination of high performance and durability in a cost-conscious package.

Boasting a 93+% thermal efficiency rating, Matrix is the perfect solution for today's energy-efficient light commercial and commercial applications. Additionally, unit sizes 50-150 MBH are certified for residential use as a utility heater.

Matrix uses an exclusive tri-metal condensing heat exchanger to maximize heat transfer while incorporating proven in-shot burner technology and traditional gas controls to minimize cost. Packaged in a unique corrosion resistant ZAM treated cabinet, Matrix is a robust option for harsh environments like greenhouses and agricultural buildings as well as traditional applications such as loading docks and garages.

HIGH EFFICIENCY HEAT EXCHANGER
The class-leading, tri-metal Matrix heat exchanger is the most advanced on the market today. The stainless-steel tubes allow for enhanced protection from corrosive flue condensate, while the highly conductive brass and aluminum fins optimize heat transfer for maximum efficiency. Matrix will help minimize a carbon footprint through reduced fuel usage and low emissions while providing significant cost-savings each heating season.

BURNER
Matrix utilizes traditional in-shot burner technology with a simplified single stage gas control to offer an affordable high efficiency unit heater solution. This also allows for a simplified startup using a standard manometer without the need for any additional tools.

DIRECT SPARK IGNITION SYSTEM
Matrix is designed using a direct spark ignition system, providing fast heat delivery through pilotless ignition of the burner. This highly reliable and efficient ignition system incorporates an integrated electronic control board to regulate the system sequence of operation, including an externally mounted LED indicator for simple troubleshooting.

VENTING
Sterling HVAC's XH Series is ETL certified in accordance with category IV venting requirements. This certification allows units to be vented either vertically or horizontally in both standard and separated combustion applications. Where allowed by code, PVC or CPVC may be used in lieu of single or double wall vent pipe allowing for an easier and more cost-effective venting installation.

SEPARATED COMBUSTION
Matrix unit heaters are ready for standard or separated combustion configurations all-in-one unit. Separated combustion "separates" the combustion process from the environment where the unit is installed. The power venting system draws a controlled quantity of combustion air from outside the building. The same system exhausts flue products to the outside. All critical components including the burners, direct spark ignition, and flue system are fully enclosed within the unit and protected from the atmosphere in the space where the heater is located, ensuring clean and efficient combustion. Separated combustion is designed for units installed in dusty, dirty, or mildly corrosive environments or where high humidity or slightly negative pressures exist.

CONTROL ACCESSIBILITY
Designed with the service person in mind, every component of Matrix unit heaters is easily accessible. Ignition and fan controls are located in one centrally located control panel. The access door provides control isolation as well as a pleasing exterior appearance.

10-YEAR WARRANTY
Sterling warranties the heat exchanger, flue collector and burners of each unit heater to be free from defects in materials and workmanship for a period of 10 years from the date of manufacture.

XH Series — High Efficiency Unit Heater

STANDARD FEATURES

- 409 Stainless Steel Tubes with Brass and Aluminum Fins
- 321 Stainless Steel Flue Collector
- 93+% Thermal Efficiency
- 115/1/60 Supply Voltage
- Power Vented
- Natural or Propane (LP) Gas
- 18-Gauge Zinc Aluminum Magnesium (ZAM) Treated Corrosion Resistant Steel Cabinetry
- Direct Spark Ignition System
- In-Shot Burner Design
- Right Side Burner Access
- Redundant Gas Valve
- High Limit Switch
- Flue Limit Switch
- Rollout Switch (Size 50-150)
- Flue Pressure Switch
- External LED Diagnostic Light
- 115/24 Volt Control Transformer
- Individually Adjustable and Removable Louvers
- Easy Access Isolated Control Panel
- Open Drip Proof Motor
- OSHA Fan Guard
- 4 Point Suspension
- Designed for either Standard or Separated Combustion
- Condensate Trap
- Condensate Float Switch
- 10-Year Heat Exchanger, Flue Collector and Burner Warranty
- Commercially Certified (All Sizes)
- Size 50-150 Residentially Certified for Use as a Utility Heater

OPTIONAL FEATURES

- Supply Voltages: 208 and 230/1/60 and 208, 230, 460, 575/3/60
- Gas Conversion Kit
- Single Stage Mercury-Free Thermostats
- Locking Thermostat Cover
- Pressure Regulator (1/2-35 PSI)
- Condensate Neutralizer
- Condensate Pump
- Condensate Pump Shelf Kit
- Concentric Vent Kit

Unit Number Description

Digit	D	X	X	X	—	1	2	3	4	5	6	7	8	9	10	11	12	13	14	15	+
Item	Prefix (Internal Use Only)					UT		CA			FT	FM	GT	AL	GC	SV	MT	MS	DL	AS	

1,2 - Unit Type [UT]
XH - High Efficiency Gas-Fired Propeller Unit Heater

3,4,5 - Capacity [CA]
050 - 50,000 BTU/HR
100 - 100,000 BTU/HR
150 - 150,000 BTU/HR
200 - 200,000 BTU/HR
250 - 250,000 BTU/HR
300 - 300,000 BTU/HR
350 - 350,000 BTU/HR
400 - 400,000 BTU/HR

6 - Furnace Type [FT]
A - Right Side Access

7 - Heat Exchanger (Furnace) Material [FM]
1 - Stainless Steel Tubes with Aluminum and Brass Fins
Note: Stainless Steel Flue Collector is standard.

8 - Gas Type [GT]
N - Natural Gas
P - Propane Gas (LP)

9 - Altitude [AL]
S - 0 – 4,999 ft.
T - 5,000 – 11,999 ft.
Note: Installations over 2,000 ft. require gas input deration in the field. Refer to unit installation instructions.

10 - Direct Spark Gas Control [GC]
1 - Single Stage

11 - Supply Voltage [SV]
1 - 115/1/60
2 - 208/1/60
3 - 230/1/60
4 - 208/3/60
5 - 230/3/60
6 - 460/3/60
7 - 575/3/60
Z - Special
Note: Supply Voltage [SV] 2-7 include field mounted step down transformer.

12 - Motor Type [MT]
1 - Open Drip Proof (Standard)

13 - Blower Motor Sizes [MS]
0 - Not applicable

14 - Design Level [DL]
A - First design level

15+ - Accessories [AS]

†FIELD INSTALLED (11AS-_____)
†All Field Installed Accessories are to be entered as a separate line item using the catalog number which utilizes "11AS" as a prefix. i.e: G3 becomes 11AS-G3.

A7 - High Pressure Regulator
A7-1/2-1 - Regulator for PSI range 0.5-10
A7-3/8-1 - Regulator for PSI range 10-20
A7-5/16-1 - Regulator for PSI range 20-35

E9 - Condensate Neutralizer (Inline)
EW - Condensate Neutralizer (Wall Mounted)

G1 - 1-Stage Mercury Free Thermostat (Round)
G2 - 1-Stage Mercury Free Thermostat w/Guard Kit
G3 - 1-Stage Mercury Free Thermostat w/Fan Switch
G5 - 2-Stage Mercury Free Thermostat w/Fan Switch
G6 - Locking Thermostat Cover
G9 - 1-Stage Mercury Free Heating Only Thermostat
GW - WiFi Thermostat TH8321WF1001/U

K8 - Condensate Pump
K9-001 - Condensate Pump Shelf

Y2 - 2" PVC Concentric Vent Kit
Y3 - 3" PVC Concentric Vent Kit
Y4 - 4" PVC Concentric Vent Kit

XH Series — High Efficiency Unit Heater Performance and Dimensional Data

Unit Capacity (MBH)		50	100	150	200	250	300	350	400
PERFORMANCE DATA†									
Input Maximum	BTU/Hr.	50,000	100,000	150,000	200,000	250,000	300,000	350,000	400,000
	(kW)	(14.6)	(29.3)	(43.9)	(58.6)	(73.2)	(87.9)	(102.5)	(117.2)
Output -	BTU/Hr.	47,900	96,000	145,350	191,200	242,500	282,600	327,600	372,000
	(kW)	(14.0)	(28.1)	(42.6)	(56.0)	(71.1)	(82.8)	(96.0)	(109.0)
Thermal Efficiency	(%)	95.8	96.0	96.9	95.6	97.0	94.2	93.6	93.0
Free Air Delivery -	CFM	691	1830	2869	3567	4154	4675	6087	6124
	(cu. m/s)	0.326	0.863	1.354	1.683	1.960	2.206	2.872	2.890
Air Temperature Rise -	Deg. F	64	50	47	50	53	56	51	58
	(Deg C.)	(35.6)	(27.8)	(26.1)	(27.8)	(29.4)	(31.1)	(28.3)	(32.2)
Condensate Production	gph	0.36	0.63	1.03	1.32	1.58	1.62	2.52	2.46
Full Load Amps at 120V		6.7	7.4	14.0	14.0	23.0	24.6	24.6	24.6
Minimum Circuit Amps at 120V		7.3	8.9	15.4	15.5	25.6	27.2	27.2	27.2
Max. Overcurrent Protection at 120V		9.8	14.6	21.2	21.2	35.9	37.5	37.5	37.5
MOTOR DATA:	Motor HP (Qty)	1/14 (2)	1/2 (1)	1/2 (2)	1/2 (2)	1 (2)	1 (2)	1 (2)	1 (2)
	Motor kW	0.05	0.37	0.37	0.37	0.74	0.74	0.74	0.74
	Motor Type, ODP	SP	PSC	PSC	PSC	PSC	PSC	PSC	PSC
	RPM	1500	1500	1500	1500	1625	1625	1625	1625
	Amps @ 115	5.2	6	12	12	21.4	21.4	21.4	21.4
DIMENSIONAL DATA - inches (mm)									
"A" Unit Height		15-1/8 (384)	21-1/8 (511)	21-1/8 (511)	21-1/8 (511)	27-5/8 (701)	27-5/8 (701)	37-3/8 (949)	37-3/8 (949)
"B" Jacket Width of Unit		46-3/8 (1179)	46-3/8 (1179)	56-3/8 (1432)	56-3/8 (1432)	56-3/8 (1432)	56-3/8 (1432)	56-3/8 (1432)	56-3/8 (1432)
"C" Depth to Rear of Housing		4-1/2 (115)	7-7/8 (201)	7-7/8 (201)	7-7/8 (201)	8-5/8 (220)	8-5/8 (220)	8-5/8 (220)	8-5/8 (220)
"D" Hanging Distance Width		41-1/4 (1048)	41-1/4 (1048)	51-1/4 (1302)	51-1/4 (1302)	43-5/8 (1108)	43-5/8 (1108)	43-5/8 (1108)	43-5/8 (1108)
"E" Hanging Distance from Rear of Housing		4-3/16 (107)	4-3/16 (107)	4-3/16 (107)	4-3/16 (107)	4 (102)	4 (102)	4 (102)	4 (102)
"F" Hanging Distance Depth		27-3/4 (705)	27-3/4 (705)	27-3/4 (705)	27-3/4 (705)	30-3/16 (766)	30-3/16 (766)	30-3/16 (766)	30-3/16 (766)
"G" Hanging Distance from Fixed Side Panel		2-11/16 (68)	2-11/16 (68)	2-5/8 (67)	2-5/8 (67)	2 (51)	2 (51)	2 (51)	2 (51)
"H" Discharge Opening Width		27-7/8 (708)	27-7/8 (708)	37-7/8 (962)	37-7/8 (962)	37-7/8 (962)	37-7/8 (962)	37-7/8 (962)	37-7/8 (962)
"J" Discharge Opening Height		7-5/16 (186)	10-15/16 (278)	13-3/4 (349)	17-1/16 (434)	20-1/4 (515)	23-9/16 (598)	26-15/16 (684)	29-7/8 (759)
"K" Side Panel to Centerline Combustion Air and Flue		8-1/4 (210)	8-1/4 (210)	8-3/16 (208)	8-3/16 (208)	7-3/16 (183)	7-3/16 (183)	7-3/16 (183)	7-3/16 (183)
"L" Bottom Panel to Centerline Combustion Air		10 (254)	15 (381)	15 (381)	15 (381)	18-7/8 (479)	18-7/8 (479)	28-5/8 (727)	28-5/8 (727)
"M" Bottom Panel to Centerline Flue		3-15/16 (100)	5-1/2 (140)	5-1/2 (140)	5-1/2 (140)	10-1/4 (260)	10-1/4 (260)	15-1/8 (384)	15-1/8 (384)
"N" Side Panel to Centerline Gas Connection		2-11/16 (68)	2-11/16 (68)	2-5/8 (66)	2-5/8 (66)	2-5/8 (66)	2-5/8 (66)	2-5/8 (66)	2-5/8 (66)
"P" Side to Centerline Condensate Drain Connection		11-1/8 (283)	11-1/8 (283)	11-1/16 (281)	11-1/16 (281)	11-1/16 (281)	11-1/16 (281)	11-1/16 (281)	11-1/16 (281)
"R" Rear to Centerline Condensate Drain Connection		11-3/8 (289)	11-3/8 (289)	11-7/16 (290)	10-7/8 (276)	10-7/8 (276)	10-7/8 (276)	10-7/8 (276)	10-7/8 (276)
Combustion Air Inlet Pipe Dia.	in.	2"	2"	3"	4"	4"	4"	4"	4"
	(mm)	(51)	(51)	(76)	(102)	(102)	(102)	(102)	(102)
* Flue Pipe Dia.	in.	2"	2"	3"	4"	4"	4"	4"	4"
	(mm)	(51)	(51)	(76)	(102)	(102)	(102)	(102)	(102)
Gas Inlet	in.	1/2"	1/2"	1/2"	1/2"	3/4"	3/4"	3/4"	3/4"
Condensate Connection Dia.	in.	3/4"	3/4"	3/4"	3/4"	3/4"	3/4"	3/4"	3/4"
Approximate Unit Weight	lb	195	245	300	330	400	413	490	504
	(kg)	(88.5)	(111.1)	(136.1)	(149.7)	(181.4)	(187.3)	(222.3)	(228.6)
Approximate Ship Weight	lb	243	293	345	375	465	478	565	579
	(kg)	(110.2)	(132.9)	(156.5)	(170.1)	(210.9)	(216.8)	(256.3)	(262.6)

† Ratings shown are for unit installations at elevations between 0 and 2,000 feet (0 to 610m). For unit installations in U.S.A. above 2,000 feet (610m), the unit input must be field derated 4% for each 1,000 feet (305m) above sea level; refer to local codes, or in absence of local codes, refer to the latest edition of the National Fuel Gas Code, ANSI Standard Z223.1 (NFPA No. 54).

For installations in Canada, any reference to deration at altitudes in excess of 2,000 feet (610m) are to be ignored. At altitudes of 2,000 feet to 4,500 feet (610 to 1372m), the unit must be field derated and be so marked in accordance with the ETL certification. See HIGH ALTITUDE DERATION section of the unit installation, operation and maintenance manual for deration information.

* Field installed PVC fittings provided with unit sizes 150-400 as follows:
- – Size 150 units come with a 2" to 3" PVC reducer
- – Size 200/300 units come with a 2" to 4" PVC reducer
- – Size 350/400 units come with a 2" to 4" PVC drain tee fitting

Reducers/drain tee fittings are to be field installed per Venting instructions.

LEGEND: ODP = Open Drip Proof, PSC = Permanent Split Capacitor, SP = Shaded Pole

XH Series — High Efficiency Unit Heater Performance and Dimensional Data

XH DIMENSIONAL DATA

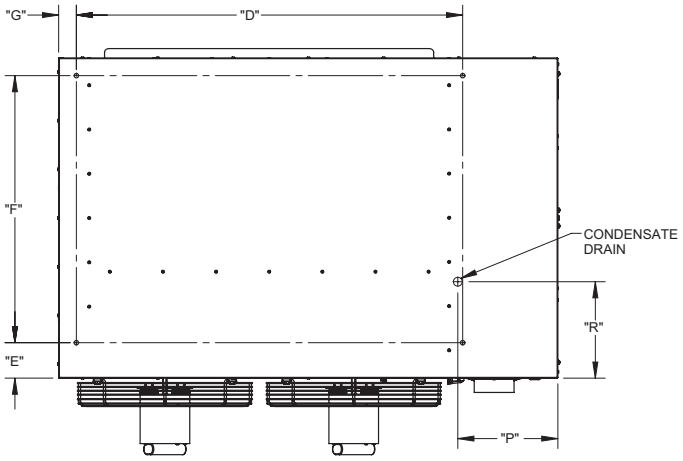

Bottom View

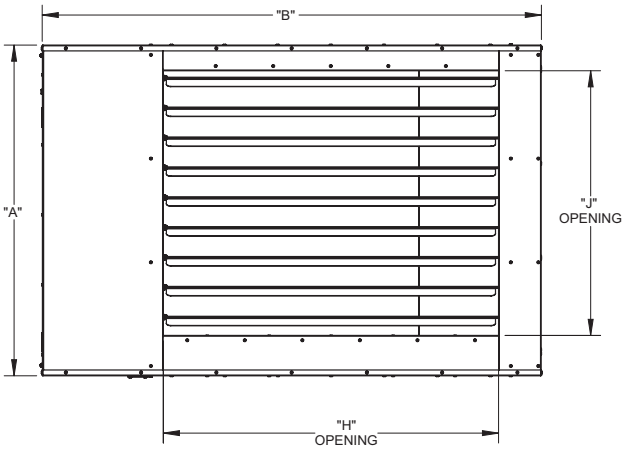

Front View

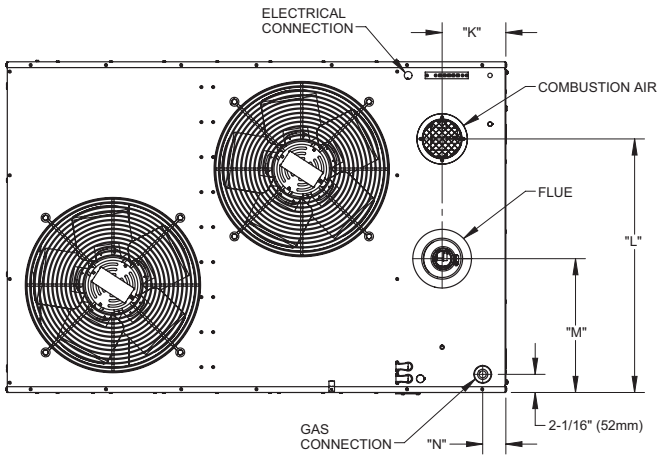

Rear View

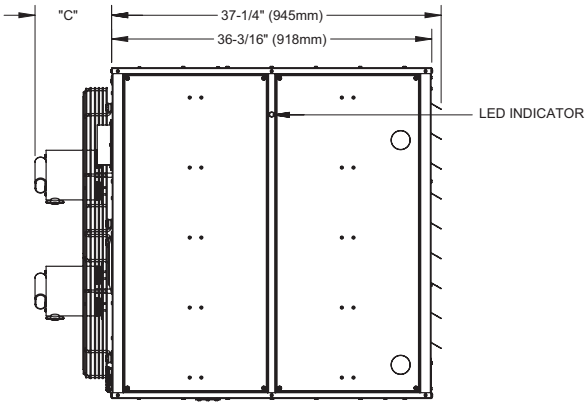

Side View

HU Series — High Efficiency Unit Heater

General Information

DESCRIPTION
Nexus brings leading edge condensing heat exchanger technology to Sterling HVAC's successful unit heater product offering. Engineered for performance, Nexus incorporates state-of-the-art control and combustion technologies.

Nexus's tri-metal condensing heat exchanger, control platform, and proprietary fully modulating pre-mix burner design, safely provide industry leading operating efficiencies. Nexus units are certified by ETL as 95+% thermal (combustion) efficient and up to 99% maximum efficiency at full turndown!

HIGH EFFICIENCY HEAT EXCHANGER
Nexus' tri-metal heat exchanger is the most advanced on the market today. The stainless-steel tubes allow for full modulation without the fear of premature failure due to the corrosive flue condensate, while the highly conductive brass and aluminum fins optimize heat transfer for maximum efficiency.

DIRECT SPARK IGNITION SYSTEM
Nexus units utilize a direct spark pilotless ignition of the burner, providing fast heat delivery. This highly reliable and efficient ignition system incorporates an integrated electronic control board to regulate the system sequence of operation, including externally mounted LED indicators for simple troubleshooting.

DDC CONTROL
The unit includes a proprietary control board specifically designed for use with the Nexus unit heater. The control board was designed with safety in mind including "SafeSense" technology to detect blocked inlet and flue conditions. The control board will automatically adjust the unit for altitude without requiring field modification. The unit will also self-adjust its operation to maintain clean combustion without decreasing performance.

Designed with ease of service in mind, the unit can quickly be changed from one gas control to another with a simple DIP switch adjustment on the control board without the need to replace components. In addition, all units come with Modbus as standard on the control board to allow the unit to communicate with the Building Automation System via Modbus. This will allow the building automation system to monitor and change set points remotely without the need to go to the unit or install additional controls in the field.

VENTING
The Sterling HU Series is ETL certified in accordance with category IV venting requirements. This certification allows units to be vented either vertically or horizontally in both standard and separated combustion applications. Where allowed by code, PVC or CPVC may be used in lieu of single or double wall vent pipe allowing for an easier and more cost-effective venting installation.

SEPARATED COMBUSTION
Separated combustion "separates" the combustion process from the environment where the unit is installed. The combustion blower draws a controlled quantity of combustion air from outside the building. All critical components including the burners, direct spark ignition, and flue system are fully enclosed within the unit and protected from the atmosphere in the space where the heater is located ensuring clean and efficient combustion. Separated combustion is designed for units installed in dusty, dirty or mildly corrosive environments or where high humidity or slightly negative pressures exist.

CONTROL ACCESSIBILITY
Designed with the service person in mind, Nexus has a separate control box located on the rear of the unit for ease access to the unit control board.

10-YEAR WARRANTY
Sterling HVAC warranties the heat exchanger, flue collector and burners of each unit heater to be free from defects in materials and workmanship for a period of 10 years from the date of manufacture.

HU Series — High Efficiency Unit Heater

STANDARD FEATURES

- 409 Stainless Steel Tubes with Brass and Aluminum Fins
- 321 Stainless Steel Flue Collector
- 95+% Thermal Efficiency
- 115/1/60 Supply Voltage
- Combustion Blower & Power Ventor
- Blocked Inlet Air Pressure Switch
- Blocked Vent Air Pressure Switch
- Natural or Propane (LP) Gas
- 20-Gauge 430 Brushed Stainless Steel Cabinetry
- Direct Spark Ignition System
- High Limit Switch
- External LED Diagnostic Lights
- 115/24 Volt Control Transformer
- Easy Access Isolated Control Panel
- Modbus
- Open Drip Proof Motor
- Rear Control Access
- 10-Year Heat Exchanger, Burner and Flue Collector Warranty
- Negative Pressure Gas Valve
- Right Side Burner Access
- OSHA Fan Guard
- 4 Point Suspension
- Separated or Standard Combustion All-In-One
- Condensate Trap
- Condensate Float Switch
- Gas Conversion Kit Included
- Residentially Certified for Use as a Utility Heater

OPTIONAL FEATURES

- Supply Voltages: 208 and 230/1/60 and 208, 230, 460, 575/3/60
- 2-Stage and Various Electronic Modulating Gas Controls
- Single and 2-Stage Mercury Free Thermostats
- Locking Thermostat Cover
- Pressure Regulator (1/2-35 PSI)
- Condensate Neutralizer
- Condensate Pump
- Condensate Pump Shelf Kit
- Concentric Vent Kit
- Stratification Sensor

Unit Number Description

Digit	N	X	X	X	—	1	2	3	4	5	6	7	8	9	10	11	12	13	14	15	+
Item	Prefix (Internal Use Only)					UT		CA			FT	FM	GT	AL	GC	SV	MT	MS	DL	AS	

1,2 - Unit Type [UT]
HU - High Efficiency Unit Heater

3,4,5 - Capacity [CA]
050 - 50,000 BTU/HR
100 - 100,000 BTU/HR
150 - 150,000 BTU/HR
200 - 200,000 BTU/HR
300 - 300,000 BTU/HR
400 - 400,000 BTU/HR

6 - Furnace Type [FT]
A - Right Side Access

7 - Heat Exchanger (Furnace) Material [FM]
1 - Stainless Steel Tubes with Aluminum and Brass Fins
Note: Stainless Steel Flue Collector is standard.

8 - Gas Type [GT]
N - Natural Gas
P - Propane Gas (LP)

9 - Altitude [AL]
S - 0-11,999 ft.
Note: Installations over 2,000 ft. require gas input deration in the field. Refer to unit installation instructions.

10 - Direct Spark Gas Control [GC]
1 - Modulating w/Outside Air Reset (Master)
2 - Modulating w/Outside Air Reset (Network)
3 - Modulating w/Indoor Air Reset
4 - Modulating w/2-10 VDC/4-20 mA Input
5 - Modulating w/Room Sensing
6 - Two Stage

11 - Supply Voltage [SV]
1 - 115/1/60
2 - 208/1/60
3 - 230/1/60
4 - 208/3/60
5 - 230/3/60
6 - 460/3/60
7 - 575/3/60
Z - Special
Note: Supply Voltage [SV] 2-7 include field mounted step down transformer.

12 - Motor Type [MT]
1 - Open Drip Proof (Standard)

13 - Blower Motor Sizes [MS]
0 - Not applicable

14 - Design Level [DL]
B - Second design level

15+ - Accessories [AS]

†FIELD INSTALLED (AS-_____)
†All Field Installed Accessories are to be entered as a separate line item using the catalog number which utilizes "11AS" as a prefix. i.e: G3 becomes 11AS-G3

A7 - High Pressure Regulator
A7-1/2-1 - Regulator for PSI range 0.5-10
A7-3/8-1 - Regulator for PSI range 10-20
A7-5/16-1 - Regulator for PSI range 20-35

E9 - Condensate Neutralizer (Inline)
EW - Condensate Neutralizer (Wall Mounted)

G1 - 1-Stage Mercury Free Thermostat (Round)
G2 - 1-Stage Mercury Free Thermostat w/Guard Kit
G3 - 1-Stage Mercury Free Thermostat/Fan Switch
G5 - 2-Stage Mercury Free Thermostat w/Fan Switch
G6 - Locking Thermostat Cover
G9 - 1-Stage Mercury Free Heating Only Thermostat
GW - WiFi Thermostat TH8321WF1001/U

H9 - Stratification Sensor

K8 - Condensate Pump
K9 - Condensate Pump Shelf

Y2 - 2" PVC Concentric Vent Kit (50-150 MBH)
Y3 - 3" PVC Concentric Vent Kit (200 MBH)
Y4 - 4" PVC Concentric Vent Kit (300-400 MBH)

HU Series — High Efficiency Unit Heater Performance and Dimensional Data

UNIT CAPACITY (MBH)		50	100	150	200	300	400
PERFORMANCE DATA†							
Input - BTU/Hr		50,000	100,000	150,000	200,000	300,000	400,000
(kW)		(14.6)	(29.3)	(43.9)	(58.6)	(87.9)	(117.2)
Output - BTU/Hr		48,600	96,000	143,000	192,000	285,000	384,000
(kW)		(14.2)	(28.1)	(41.8)	(56.3)	(83.5)	(112.5)
Thermal Efficiency - %		97	96	95	96	95	96
Free Air Delivery - CFM		790	1,616	2,661	3,232	4,848	6,464
(cu. m/s)		(0.373)	(0.763)	(1.255)	(1.525)	(2.288)	(3.050)
Air Temperature Rise - ºF		57	55	50	55	55	55
(ºC)		(31.7)	(30.6)	(27.8)	(30.6)	(30.6)	(30.6)
Full Load Amps at 120V		10.0	10.8	19.5	19.5	31.0	31.0
Minimum Circuit Amps at 120V		10.7	12.3	21.0	21.0	33.7	33.7
Max Overcurrent Protection at 120V		13.3	18.3	27.0	27.0	44.4	44.4
MOTOR DATA:	Motor HP (Qty)	1/14 (2)	1/2	1/2 (2)	1/2 (2)	1 (2)	1 (2)
	Motor kW	0.05	0.37	0.37	0.37	0.74	0.74
	Motor Type ODP	SP	PSC	PSC	PSC	PSC	PSC
	RPM	1,500	1,500	1,500	1,500	1,625	1,625
	Amps @ 115V	5.2	6.0	12.0	12.0	22.0	22.0

† Ratings shown are for unit installations at elevations between 0 and 2,000 feet (0 to 610m). For unit installations in U.S.A. above 2,000 feet (610m), the unit input must be field derated 4% for each 1,000 feet (305m) above sea level; refer to local codes, or in absence of local codes, refer to the latest edition of the National Fuel Gas Code, ANSI Standard Z223.1 (NFPA No. 54).

For installations in Canada, any reference to deration at altitudes in excess of 2,000 feet (610m) are to be ignored. At altitudes of 2,000 feet to 4,500 feet (610 to 1372m), the unit must be field derated and be so marked in accordance with the ETL certification. See HIGH ALTITUDE DERATION section of Installation Manual for deration information.

LEGEND: ODP = OPEN DRIP PROOF PSC = PERMANENT SPLIT CAPACITOR SP = SHADED POLE

UNIT CAPACITY (MBH)	50	100	150	200	300	400
DIMENSIONAL DATA - Inches (mm)						
"A" Height to Top of Combustion Air Inlet	13-5/8 (346)	18-3/4 (476)	18-3/4 (476)	18-3/4 (476)	27-1/8 (689)	34-7/8 (886)
"B" Jacket Width of Unit	42-13/16 (1087)	42-13/16 (1087)	54-13/16 (1392)	54-13/16 (1392)	54-13/16 (1392)	54-13/16 (1392)
"C" Unit Height	12-1/4 (311)	17-1/4 (438)	17-1/4 (438)	17-1/4 (438)	25-11/16 (653)	33-7/16 (850)
"D" Depth to Rear of Housing	5-3/4 (147)	11 (279)	10-5/16 (261)	11 (279)	10-7/8 (277)	11-1/2 (292)
"E" Hanging Distance Width	28 (710)	27-15/16 (710)	38 (965)	38 (965)	41-3/4 (1060)	41-3/4 (1060)
"F1" Hanging Distance Depth	17-3/8 (440)	17-1/4 (438)	21-1/8 (537)	21-1/4 (540)	20 (508)	20 (508)
"F2" Hanging Distance Depth	17-3/8 (440)	17-1/4 (438)	21-1/8 (537)	21-1/4 (540)	26 (660)	26 (660)
"G" Discharge Opening Width	15 (381)	15 (381)	26 (660)	26 (660)	26 (660)	26 (660)
"H" Discharge Opening Height	10-1/8 (256)	15-7/8 (403)	15-7/8 (403)	15-7/8 (403)	24-3/8 (619)	32-1/8 (816)
"J" Side Panel to Centerline Combustion Air	2-3/4 (70)	2-13/16 (71)	3-3/4 (95)	3-3/4 (95)	3-3/4 (95)	3-3/4 (95)
"K" Front Panel to Centerline Combustion Air	4-1/2 (115)	4-1/2 (114)	5-5/16 (135)	5-5/16 (135)	5-5/16 (134)	5-5/16 (134)
"L" Overall Unit Depth	32-5/8 (829)	38 (965)	41 (1040)	42 (1067)	42 (1067)	42 (1067)
"M" Side Depth	27-7/16 (696)	27-7/16 (697)	31-1/4 (794)	31-1/4 (794)	31-1/4 (794)	31-1/4 (794)
"N" Combustion Air Inlet Connection Dia.	2 (51)	2 (51)	2 (51)	3 (76)	4 (102)	4 (102)
"P" Flue Connection Diameter	2 (51)	2 (51)	2 (51)	3 (76)	4 (102)	4 (102)
"Q" Side Panel to Centerline Gas Connection	2-1/8 (54)	2-5/8 (67)	2-5/8 (67)	2-5/8 (67)	2-5/8 (67)	2-5/8 (67)
"R" Bottom Panel to Centerline Gas Connection	1-1/2 (40)	2-1/2 (64)	2-1/2 (64)	2-1/2 (64)	2-1/2 (64)	2-1/2 (64)
"S" Side Panel to Centerline Flue	5-3/8 (137)	5-1/8 (130)	6-1/2 (165)	6-1/16 (154)	5-3/8 (137)	5-3/8 (137)
"T" Bottom Panel to Centerline Flue	2-1/2 (64)	4-5/8 (117)	4-5/8 (117)	4-5/8 (117)	8-1/8 (206)	13-1/8 (334)
"U" Side to Centerline Condensate Drain Connection	8-1/2 (214)	8-1/2 (216)	9-1/2 (241)	9-1/2 (241)	9-1/2 (241)	9-1/2 (241)
"W" Rear to Centerline Condensate Drain Connection	9-9/16 (243)	9-9/16 (243)	10-9/16 (268)	10-9/16 (268)	10-1/8 (257)	10-1/8 (257)
Combustion Air Inlet Pipe Dia. - Inches	2	2	2	3	4	4
(mm)	(51)	(51)	(51)	(76)	(102)	(102)
* Flue Pipe Dia - Inches	2	2	2	3	4	4
(mm)	(51)	(51)	(51)	(76)	(102)	(102)
Gas Inlet - Inches	1/2	1/2	1/2	1/2	3/4	3/4
Approximate Unit Weight - Lbs	120	180	209	260	323	385
(kg)	(54.4)	(81.6)	(94.8)	(117.9)	(146.5)	(174.6)
Approximate Ship Weight - Lbs	168	228	254	305	388	460
(kg)	(76.2)	(103.4)	(115.2)	(138.3)	(176.0)	(208.6)

* Field installed PVC fittings provided with unit sizes 200-400 as follows:
- Size 200 units come with a 2" to 3" PVC reducer
- Size 300 units come with a 2" to 4" PVC reducer
- Size 400 units come with a 2" to 4" PVC drain tee fitting

Reducers/drain tee fittings are to be field installed per Venting instructions.

HU Series — High Efficiency Unit Heater Performance and Dimensional Data

HU050 DIMENSIONAL DATA

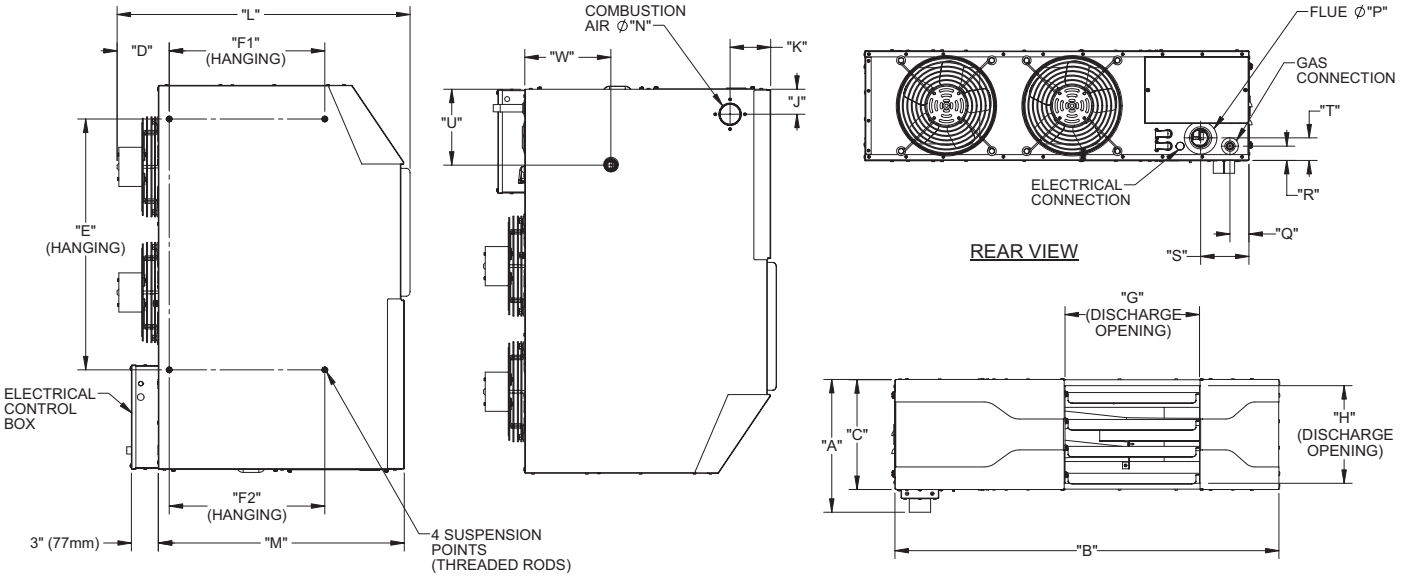

CAT-10081D

HU100-HU400 DIMENSIONAL DATA

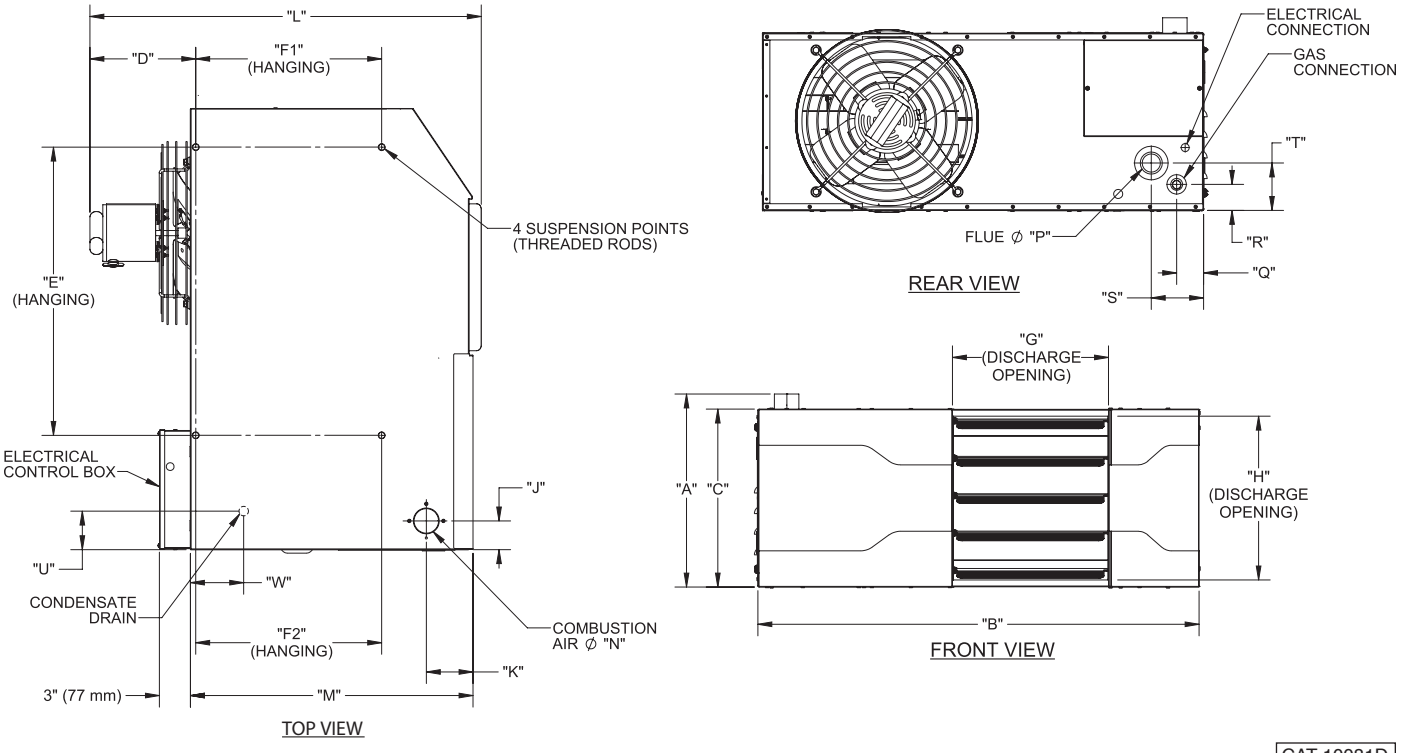

CAT-10081D

Tubular Unit Heaters

- **GG SERIES**
- **XF SERIES**
- **XC SERIES**

General Information

STERLING TUBULAR DESIGN GAS-FIRED UNIT HEATER
The Sterling Tubular gas-fired unit heaters offer a highly efficient, extremely durable alternative to the traditional clam shell design. These units combine the latest tubular heat exchanger and inshot burner technology with the quality and reliability you have come to know from Sterling.

HIGH EFFICIENCY
Standard energy saving features like the direct spark ignition and power venting reduce standby losses and offer improved seasonal efficiencies. Tubular units certified by ETL as providing 83% thermal (combustion) efficiency.

TUBULAR HEAT EXCHANGER
The Sterling tubular heat exchanger has been designed to provide maximum and uniform heat transfer. The low pressure drop associated with this design enables heated air to be evenly distributed to the conditioned space. This curved, non-welded serpentine design experiences less thermally induced stress making it highly durable for significantly longer service life. All Sterling tubular heat exchangers are constructed of heavy duty 20-gauge aluminized steel. Optional 409 stainless steel heat exchangers are also available.

DIRECT SPARK IGNITION SYSTEM
Sterling Tubular units utilize a direct spark pilotless ignition of the burner, providing fast heat delivery. This highly reliable and efficient ignition system incorporates an integrated electronic control board to regulate the system sequence of operation, including an externally mounted LED indicator for simple troubleshooting.

VENTING
The Sterling Tubular unit heaters are ETL certified in accordance with categories I and III venting requirements. This certification allows units to be vented both vertically and horizontally using either single wall or double wall venting materials. This venting flexibility of the unit heater makes installation easier and more cost effective by allowing the installer to utilize existing venting components.

CONTROL ACCESSIBILITY
Designed with the service person in mind, every component of the Sterling unit heaters is easily accessible. Ignition and fan controls are located in one centrally located control panel. The access door provides control isolation as well as a pleasing exterior appearance.

10-YEAR WARRANTY
Sterling warranties the heat exchanger, flue collector and burners of each unit heater to be free from defects in materials and workmanship for a period of 10 years from the date of manufacture.

SEPARATED COMBUSTION
The GG, XF & XC Series heaters are ready for standard or separated combustion configurations all in one unit. A separated combustion configuration “separates” the combustion process from the environment where the unit is installed. A power venting system draws a controlled quantity of combustion air from outside the building. The same system exhausts flue products to the outside. The burners and flue system are enclosed within the unit; thus, the entire combustion process is unaffected by the atmosphere in the space where the heater is located. Separated combustion configurations are designed to be installed where dusty, dirty or mildly corrosive conditions exist or where high humidity or slightly negative pressure prevail.

GG Series — Low Profile Unit Heater

RESIDENTIAL AND COMMERCIAL CERTIFICATIONS

The Sterling GG Series unit heater conforms with the latest ETL certification standards. Design certified under ANSI Z83.8 for Industrial/ Commercial use and Residential use as a utility heater, make this low profile unit heater the ideal selection.

Additionally, GG Series units are ready for installation in either standard or separated combustion applications right out of the box. If concentric venting is needed, simply add an optional Combustion Air Inlet Kit.

STANDARD FEATURES

- Standard or Separated Combustion All-In-One Units
- 82+% Thermal Efficiency
- Redundant Single-Stage Gas Valve
- Residential Certification
- 120/24V Control Transformer
- OSHA Fan Guard
- 115/1/60 Fan Motor with Internal Overload Protection
- Direct Spark Ignition
- 20-Gauge Cabinet with Baked Enamel Finish
- 10-Year Heat Exchanger Warranty
- Right Hand Control Access - Field Convertible to Left Hand
- High Limit Switch
- Air Pressure Switch
- Natural or Propane Gas
- Gas Conversion Kit Included
- Easy Access Control Panel
- 321 Stainless Steel Burner Box
- 20-Gauge Aluminized Heat Exchanger
- Power Vented

OPTIONAL FEATURES

- 409 Stainless Steel Heat Exchanger
- Two-Stage Gas Control (Sizes 60-120 Only)
- Stainless Steel Flue Collector
- Supply Voltage (Field Mounted Transformers):
  - 208/1/60
  - 230/1/60
  - 208/3/60
  - 230/3/60
  - 460/3/60
  - 575/3/60
- Vent Caps
- Totally Enclosed Motors (Sizes 60-120 Only)
- Pressure Regulator (1/2 – 35 psi)
- Single & Two-Stage Mercury Free Thermostats
- Locking Thermostat Cover
- 24V SPST Relay
- Combustion Air Inlet Kits (For Concentric Venting)
- Discharge Nozzles (30°, 60°, 90°)

Unit Number Description

Digit	G	X	X	X	—	1	2	3	4	5	6	7	8	9	10	11	12	13	14	15	+
Item	Prefix (Internal use Only)					UT		CA			FT	FM	GT	AL	GC	SV	MT	DL	AS		

1, 2 - Unit Type [UT]
GG - Residential Low Profile Tubular Propeller
Note: Field conversion to Separated Combustion requires a Combustion Air Inlet Kit.
See Accessory Options X7-4 and X7-5 for proper unit selection.

3, 4, 5 - Capacity [CA]
030 - 30,000 BTU/HR
045 - 45,000 BTU/HR
060 - 60,000 BTU/HR
075 - 75,000 BTU/HR
090 - 90,000 BTU/HR
105 - 105,000 BTU/HR
120 - 120,000 BTU/HR

6 - Furnace Type [FT]
A - Right Hand Access

7 - Furnace Material [FM]*
1 - Standard (Aluminized) Steel
2 - 409 Stainless Steel
**Heat exchanger tube material only.*

8 - Gas Type [GT]
N - Natural Gas
P - Propane (LP) Gas

9 - Altitude [AL]
S - 0–4,999 feet
T - 5,000–11,999 feet
Note: Installations over 2,000 feet require gas input deration in the field.
Refer to unit installation instructions.

10 - Gas Control [GC]
A - Single Stage (Standard)
B - Two Stage (Capacities [CA] 060 through 120 only)

11 - Supply Voltage [SV]
1 - 115/1/60
2 - 208/1/60
3 - 230/1/60
4 - 208/3/60
5 - 230/3/60
6 - 460/3/60
7 - 575/3/60
Z - Special
Note: Supply Voltage [SV] 2-7 include field mounted step down transformer.

12 - Motor Type [MT]
1 - Open Drip Proof (Standard)
2 - Totally Enclosed (Capacities [CA] 060 through 120 only)

13 - Development Level [DL]
C - Production Onset

14, 15+ - Accessories [AS]

FACTORY INSTALLED
S3 - Stainless Steel Flue Collector
Z1 - Special
All Field Installed Accessories are to be entered as a separate line item using catalog number which places "11AS" as a prefix. i.e: G3 becomes 11AS-G3.

FIELD INSTALLED (AS-____)
A7 - High Pressure Regulator
A7 - 1/2-1 Regulator for 0.5-10 PSI
A7 - 3/8-1 Regulator for 10-20 PSI
A7 - 5/16-1 Regulator for 20-35 PSI

G1 - 1-Stage Mercury Free Thermostat (Round)
G2 - 1-Stage Mercury Free Thermostat w/Guard Kit
G3 - 1-Stage Mercury Free Thermostat/Fan Switch
G5 - 2-Stage Mercury Free Thermostat w/Fan Switch
G6 - Locking Thermostat Cover
G9 - 1-Stage Mercury Free Heating Only Thermostat
GW - WiFi Thermostat TH8321WF1001/U

P5 - 24V SPST Relay-Specify Purpose

T1 - Quick Swivel Mounting Bracket

VC-4 - 4 inch Vent Cap

X2 - 30 Degree Downturn Nozzle
X3 - 60 Degree Downturn Nozzle
X4 - 90 Degree Downturn Nozzle
X7-4 - Combustion Air Inlet Kit (Capacities [CA] 030-075)
X7-5 - Combustion Air Inlet Kit (Capacities [CA] 090-120)

GG Series — Low Profile Unit Heater Performance and Dimensional Data

UNIT CAPACITY (MBH)	30	45	60	75	90	105	120
PERFORMANCE DATA†							
Input - BTU/Hr	30,000	45,000	60,000	75,000	90,000	105,000	120,000
(kW)	(8.8)	(13.2)	(17.6)	(22.0)	(26.4)	(30.8)	(35.2)
Output - BTU/Hr	24,900	37,350	49,800	61,500	73,800	86,100	98,400
(kW)	(7.2)	(10.9)	(14.5)	(18.0)	(21.6)	(25.2)	(28.8)
Thermal Efficiency - %	83	83	83	82	82	82	82
Free Air Delivery - CFM	370	550	740	920	1,100	1,300	1,475
(cu. m/s)	(.175)	(.260)	(.349)	(.434)	(.519)	(.614)	(.696)
Air Temperature Rise - °F	60	60	60	60	60	60	60
(°C)	(33)	(33)	(33)	(33)	(33)	(33)	(33)
Full Load Amps at 120V	3.2	3.2	4.1	4.1	6.4	6.4	6.4
Minimum Circuit Ampacity at 120V	3.7	3.7	4.8	4.8	7.5	7.5	7.5
MOTOR DATA: Motor HP	1/20	1/20	1/12	1/12	1/10	1/10	1/10
Motor (kW)	(0.04)	(0.04)	(0.06)	(0.06)	(0.075)	(0.075)	(0.075)
Motor Type ODP††	SP	SP	SP	SP	SP	SP	SP
RPM	1650	1650	1050	1050	1050	1050	1050
Motor Amps @ 115V	1.9	1.9	2.6	2.6	4.2	4.2	4.2
DIMENSIONAL DATA - Inches (mm)							
"A" Jacket Height	12-3/8	12-3/8	15-7/8	15-7/8	22-5/8	22-5/8	22-5/8
	(314)	(314)	(403)	(403)	(574)	(574)	(574)
"B" Overall Height	13-1/4	13-1/4	16-13/16	16-13/16	23-9/16	23-9/16	23-9/16
	(337)	(337)	(427)	(427)	(598)	(598)	(598)
"C" Overall Depth	25-7/8	25-7/8	26-3/16	26-3/16	26-3/8	26-3/8	26-3/8
	(632)	(632)	(665)	(665)	(670)	(670)	(670)
"D1" Center Line Height of Flue*	8-1/2	8-1/2	10-3/8	10-3/8	13-5/8	13-5/8	13-5/8
	(216)	(216)	(263)	(263)	(346)	(346)	(346)
"D2" Center Line Height of Air Intake	8-1/2	8-1/2	8	8	8-5/8	8-5/8	8-5/8
	(216)	(216)	(203)	(203)	(219)	(219)	(219)
"E" Fan Diameter	10	10	14	14	16	16	16
	(254)	(254)	(356)	(356)	(406)	(406)	(406)
"F" Discharge Opening Height	10-13/16	10-13/16	14-7/16	14-7/16	21-3/16	21-3/16	21-3/16
	(275)	(275)	(367)	(367)	(538)	(538)	(538)
"G" Vent Connection Diameter	4	4	4	4	4	4	4
	(102)	(102)	(102)	(102)	(102)	(102)	(102)
"H1" Center Line of Flue Connection From Side	7-1/4	7-1/4	7-1/4	7-1/4	7-3/4	7-3/4	7-1/4
	(184)	(184)	(184)	(184)	(197)	(197)	(184)
"H2" Center Line of Air Intake From Side	2-3/4	2-3/4	2-3/4	2-3/4	3-1/2	3-1/2	3-1/2
	(70)	(70)	(70)	(70)	(89)	(89)	(89)
VENT SIZE REQUIREMENTS - STANDARD COMBUSTION							
Category III Horizontal - Inches	4	4	4	4	4	4	4
(mm)	(102)	(102)	(102)	(102)	(102)	(102)	(102)
Category I & III Vertical - Inches	4	4	4	4	4	4	4
(mm)	(102)	(102)	(102)	(102)	(102)	(102)	(102)
VENT SIZE REQUIRMENTS - SEPARATED COMBUSTION							
Exhaust Diameter** - Inches	4	4	4	4	5	5	5
(mm)	(102)	(102)	(102)	(102)	(127)	(127)	(127)
Intake Air Diameter - Inches	4	4	4	4	5	5	5
(mm)	(102)	(102)	(102)	(102)	(127)	(127)	(127)
Unit Weight - Lbs	60	65	80	85	95	105	110
(kgs)	(27)	(29)	(36)	(39)	(43)	(48)	(50)
Shipping Weight - Lbs	70	75	90	95	110	115	120
(kgs)	(32)	(34)	(41)	(43)	(50)	(52)	(54)

*For all installations, the flue collar is included with the unit and should be field installed per the instructions included with the unit.

**4-5 inch reducer supplied where required.

† Ratings shown are for unit installations at elevations between 0 and 2,000 feet (0 to 610m). For unit installations in USA above 2,000 feet (610m), the unit input must be field derated 4% for each 1,000 feet (305m) above sea level; refer to local codes, or in absence of local codes, refer to the latest edition of the National Fuel Gas Code, ANSI Standard Z223.1 (NFPA No. 54).

For installations in Canada, any reference to deration at altitudes in excess of 2,000 feet (610m) are to be ignored. At altitudes of 2,000 feet to 4,500 feet (610 to 1372m), the unit must be field derated and be so marked in accordance with the ETL certification. See unit installation, operation and maintenance manual for deration information.

†† LEGEND: ODP = OPEN DRIP PROOF SP = SHADED POLE

GG Series — Low Profile Unit Heater Dimensional Data

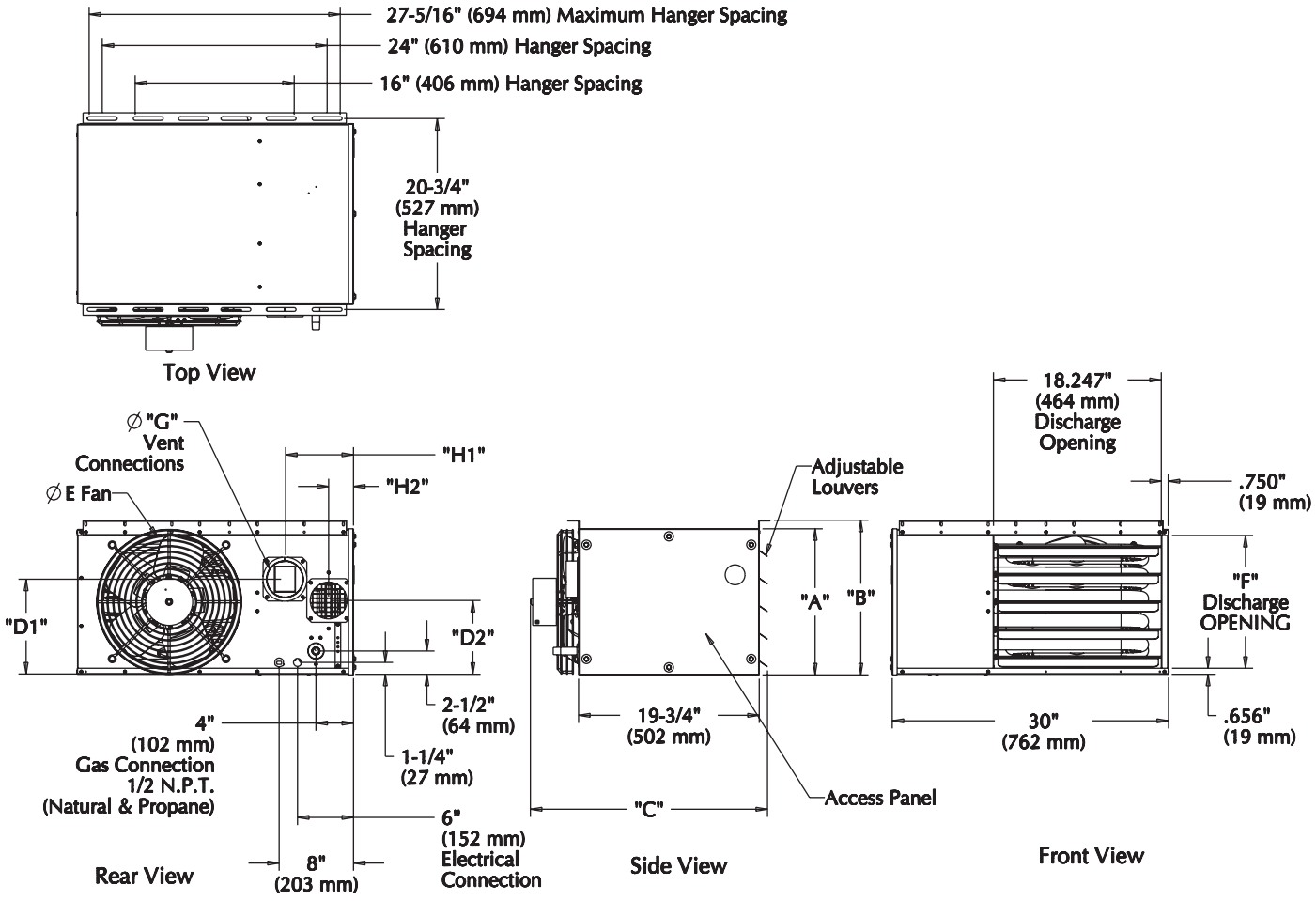

D8597

DIMENSIONS .XXX STANDARD UNITS
DIMENSIONS IN PARENTHESIS (XXX) MILLIMETERS

XF/XC Series — Tubular Unit Heater

STANDARD FEATURES

- Designed for either Standard or Separated Combustion
- In-Shot Burner Design
- 20-Gauge Steel Jacket with Baked Enamel Finish
- Main Control Panel
- 115/1/60 Supply Voltage
- Direct Spark Ignition
- Redundant Single-Stage Gas Valve
- 115/24 Volt Control Transformer
- Individually Adjustable and Removable Louvers
- Power Vented
- 115/1/60 Volt Motor with Internal Overload Protection
- 10-Year Heat Exchanger, Flue Collector and Burner Warranty
- 82+% Thermal Efficiency

OPTIONAL FEATURES

- Stainless Steel Heat Exchanger, Burners and/or Flue Collector
- Supply Voltages: 208 & 230/1/60 and 230, 460, 575/3/60
- Premium Efficiency Blower Motors in ODP and TE Types
- Two-Stage and Various Electronic Modulation Gas Controls
- Discharge Nozzles (30°, 60° & 90°) or Duct Flange Assembly
- Combustion Air Inlet Kit (allows concentric venting with horizontal or vertical termination)

Unit Number Description

Digit	T	X	X	X	–	1	2	3	4	5	6	7	8	9	10	11	12	13	14	+
Item	Prefix					UT		CA			FT	FM	GT	AL	GC	SV	MT	MS	AS	

(Internal use Only)

1, 2 - Unit Type [UT]
XF - Convertible Venting, Tubular Propeller
XC - Convertible Venting, Tubular Blower

3, 4, 5 - Capacity [CA]
100 - 100,000 BTU/HR
125 - 125,000 BTU/HR
150 - 150,000 BTU/HR
175 - 175,000 BTU/HR
200 - 200,000 BTU/HR
250 - 250,000 BTU/HR
300 - 300,000 BTU/HR
350 - 350,000 BTU/HR
400 - 400,000 BTU/HR

6 - Furnace Type [FT]
A - Right Side Access

7 - Heat Exchanger Construction Material [FM]
1 - Standard (Aluminized) Steel
2 - 409 Stainless Steel

8 - Gas Type [GT]
N - Natural Gas
P - Propane Gas (LP)

9 - Altitude [AL]
S - 0–4,999 feet
T - 5,000–11,999 feet
Note: Installations over 2,000 feet require gas input deration in the field.
Refer to unit installation instructions.

10 - Direct Spark Gas Control [GC]
1 - Single Stage
2 - Two Stage
3 - Electronic Modulation w/Room Sensing
4 - Electronic Modulation w/Duct Sensing (Blower only)
5 - Electronic Modulation w/Duct Sensing & Room Ovrd. Stat (Blower only)
6 - Electronic Modulation w/External 4-20 mA Input
7 - Electronic Modulation w/External 0-10 VDC Input

11 - Supply Voltage [SV]
1 - 115/1/60
2 - 208/1/60
3 - 230/1/60
4 - 208/3/60
5 - 230/3/60
6 - 460/3/60
7 - 575/3/60
Z - Special
Note: Supply Voltages [SV] 2-7 include step down transformer.
Field mounted for propeller units, factory mounted for blower units.

12 - Motor Type [MT]
1 - Open Drip Proof (Standard)
2 - Totally Enclosed
3 - Premium Efficiency, Open Drip Proof (Blowers only)
4 - Premium Efficiency, Totally Enclosed (Blowers only)

13 - Blower Motor Sizes [MS]**
A - 1/4 HP w/Contactor
C - 1/2 HP w/Contactor
D - 3/4 HP w/Contactor
F - 1 HP w/Contactor
G - 1-1/2 HP w/Contactor
H - 2 HP w/Contactor
J - 1/4 HP
L - 1/2 HP
P - 1/2 HP w/Magnetic Starter
R - 3/4 HP w/Magnetic Starter
S - 1 HP w/Magnetic Starter
T - 1-1/2 HP w/Magnetic Starter
U - 2 HP w/Magnetic Starter
W - 1/4 HP w/Magnetic Starter
0 - None/Not Applicable

**Notes: 1. All 3-phase units [SV = 4, 5, 6, 7] include a contactor as standard.
2. All single phase units [SV = 1, 2, 3] include a contactor for units equipped with 3/4 HP motor or higher [MS =D, F, G, H]
3. [MS] options J, L only available with [SV] option 1 (115/1/60).

14 - Accessories [AS]

FACTORY INSTALLED
M6 - OSHA Type Fan Guard (Propellers only)
M8 - Discharge Duct Flange Assembly (Blowers only)
P4 - Terminal Block Wiring
P6 - Summer/Winter Switch
S3 - 409 Stainless Steel Flue Collector
S5 - 304L Stainless Steel Burners

† FIELD INSTALLED (AS-____)
† All Field Installed Accessories are to be entered as a separate line item using catalog number which utilizes "11AS" as a prefix. i.e: G3 becomes 11AS-G3.

A7 - High Pressure Regulator
A7 - 1/2-1 Regulator for 0.5-10 PSI
A7 - 3/8-1 Regulator for 10-20 PSI
A7 - 5/16-1 Regulator for 20-35 PSI

F1 - 1-Stage T675A Ductstat (Blower only)
F2 - 2-Stage T678A Ductstat (Blower only)

G1 - 1-Stage Mercury Free Thermostat (Round)
G2 - 1-Stage Mercury Free Thermostat w/Guard Kit
G3 - 1-Stage Mercury Free Thermostat/Fan Switch
G5 - 2-Stage Mercury Free Thermostat w/Fan Switch
G6 - Locking Thermostat Cover
G9 - 1-Stage Mercury Free Heating Only Thermostat
GW - WiFi Thermostat TH8321WF1001/U

H5 - Low Ambient Control

M2-2 - Vent Caps (5 inch) (Unit Capacity 100-250)
M2-3 - Vent Caps (6 inch) (Unit Capacity 300-400)
M7 - 2 to 4 Point Suspension Kit (Propeller Only)

P5 - 24V SPST Relay-Specify Purpose

Q1 - Y-Splitter Nozzle

X2 - 30 Degree Downturn Nozzle
X3 - 60 Degree Downturn Nozzle
X4 - 90 Degree Downturn Nozzle
X5 - Vertical Louver Kit

X7-H5 - Horiz. Combustion Air Inlet Kit, 5 inch (Unit Capacity 100-250)
X7-H6 - Horiz. Combustion Air Inlet Kit, 6 inch (Unit Capacity 300-400)
X7-V5 - Vert. Combustion Air Inlet Kit, 5 inch (Unit Capacity 100-250)
X7-V6 - Vert. Combustion Air Inlet Kit, 6 inch (Unit Capacity 300-400)

XF Series — Tubular Propeller Unit Heater Performance and Dimensional Data

Unit Capacity (MBH)		100	125	150	175	200	250	300	350	400
PERFORMANCE DATA†										
Input - BTU/Hr.		100,000	125,000	150,000	175,000	200,000	250,000	300,000	350,000	400,000
(kW)		(29.3)	(36.6)	(43.9)	(51.2)	(58.6)	(73.2)	(87.8)	(102.5)	(117.1)
Output - BTU/Hr.		83,000	103,750	124,500	145,250	166,000	207,500	249,000	290,500	332,000
(kW)		(24.3)	(30.4)	(36.4)	(42.5)	(48.6)	(60.7)	(72.9)	(85.1)	(97.2)
Thermal Efficiency - %		83	83	83	83	83	83	83	83	83
Free Air Delivery - CFM		1,600	2,200	2,400	2,850	3,200	3,450	5,000	5,600	5,800
(cu. m/s)		(0.756)	(1.039)	(1.133)	(1.346)	(1.511)	(1.629)	(2.361)	(2.644)	(2.738)
Air Temperature Rise - °F		47	42	47	46	47	54	45	47	51
(°C)		(26)	(23)	(26)	(26)	(26)	(30)	(24)	(26)	(28)
Full Load Amps at 120V		6.4	6.9	6.9	8.0	8.0	8.0	11.6	13.8	13.8
Min. Circuit Amps at 120V		7.5	8.1	8.1	9.5	9.5	9.5	12.8	15.3	15.3
MOTOR DATA:	Motor HP	1/10	1/4	1/4	1/3	1/3	1/3	1/4 (2)	1/3 (2)	1/3 (2)
	Motor kW	(0.08)	(0.19)	(0.19)	(0.25)	(0.25)	(0.25)	(0.19)	(0.25)	(0.25)
	Motor Type (ODP)	SP	PSC	PSC	PSC	PSC	PSC	PSC	PSC	PSC
	RPM	1,050	1,050	1,050	1,050	1,050	1,050	1,050	1,050	1,050
	Amps @ 115V	4.2	4.7	4.7	5.8	5.8	5.8	9.4	11.6	11.6
DIMENSIONAL DATA - inches (mm)										
"A" Overall Height to Top of Flue		33-3/4	33-3/4	33-3/4	33-3/4	33-3/4	33-3/4	34	34	34
		(857)	(857)	(857)	(857)	(857)	(857)	(864)	(864)	(864)
"B" Jacket Width of Unit		20-3/4	20-3/4	20-3/4	32-3/4	32-3/4	32-3/4	50-3/4	50-3/4	50-3/4
		(527)	(527)	(527)	(831)	(831)	(831)	(1289)	(1289)	(1289)
"C" Width to CL Flue		13-3/8	13-3/8	13-3/8	19-3/8	19-3/8	19-3/8	28-3/8	28-3/8	28-3/8
		(340)	(340)	(340)	(492)	(492)	(492)	(721)	(721)	(721)
"D" Depth to Rear of Housing		11	11	11	11	11	11	12-1/4	12-1/4	12-1/4
		(279)	(279)	(279)	(279)	(279)	(279)	(311)	(311)	(311)
"E" Hanging Distance Width		18-5/8	18-5/8	18-5/8	30-5/8	30-5/8	30-5/8	48-5/8	48-5/8	48-5/8
		(473)	(473)	(473)	(778)	(778)	(778)	(1235)	(1235)	(1235)
"F" Discharge Opening Width		18-3/4	18-3/4	18-3/4	30-3/4	30-3/4	30-3/4	48-3/4	48-3/4	48-3/4
		(476)	(476)	(476)	(781)	(781)	(781)	(1238)	(1238)	(1238)
"G" Depth to CL Flue		4-3/4	4-3/4	4-3/4	4-3/4	4-3/4	4-3/4	5-1/8	5-1/8	5-1/8
		(121)	(121)	(121)	(121)	(121)	(121)	(130)	(130)	(130)
"L" Overall Unit Width		25-1/4	25-1/4	25-1/4	37-1/4	37-1/4	37-1/4	55-1/4	55-1/4	55-1/4
		(641)	(641)	(641)	(946)	(946)	(946)	(1403)	(1403)	(1403)
Combustion Air Inlet Dia. (Qty) - in		5	5	5	5	5	5	5 (2)	5 (2)	5 (2)
(mm)		(127)	(127)	(127)	(127)	(127)	(127)	(127)	(127)	(127)
"M" Flue Size Diameter* - in		5	5	5	5	5	5	6	6	6
(mm)		(127)	(127)	(127)	(127)	(127)	(127)	(152)	(152)	(152)
Gas Inlet, Natural Gas - in		1/2	1/2	1/2	1/2	1/2	1/2	3/4	3/4	3/4
Gas Inlet, LP Gas - in		1/2	1/2	1/2	1/2	1/2	1/2	3/4	3/4	3/4
Approximate Unit Weight - lb		135	147	157	194	204	214	311	325	339
(kg)		(61)	(67)	(71)	(88)	(93)	(97)	(141)	(147)	(154)
Approximate Ship Weight - lb		175	187	197	244	254	264	371	385	399
(kg)		(79)	(85)	(89)	(111)	(115)	(120)	(168)	(175)	(181)

† Ratings shown are for unit installations at elevations between 0 and 2,000 ft (0 to 610m). For unit installations in U.S.A. above 2,000 ft. (610m), the unit input must be field derated 4% for each 1,000 ft. (305m) above sea level; refer to local codes, or in absence of local codes, refer to the latest edition of the National Fuel Gas Code, ANSI Standard Z223.1 (N.F.P.A. No. 54).

For installations in Canada, any reference to deration at altitudes in excess of 2,000 ft. (610m) are to be ignored. At altitudes of 2,000 ft. to 4,500 ft. (610 to 1372m), the unit must be field derated and be so marked in accordance with the ETL certification. See unit installation manual for field deration information.

* Flue collar is factory supplied with unit; to be field installed per included instructions.

** LEGEND: SP = SHADED POLE PSC = PERMANENT SPLIT CAPACITOR ODP = OPEN DRIP PROOF

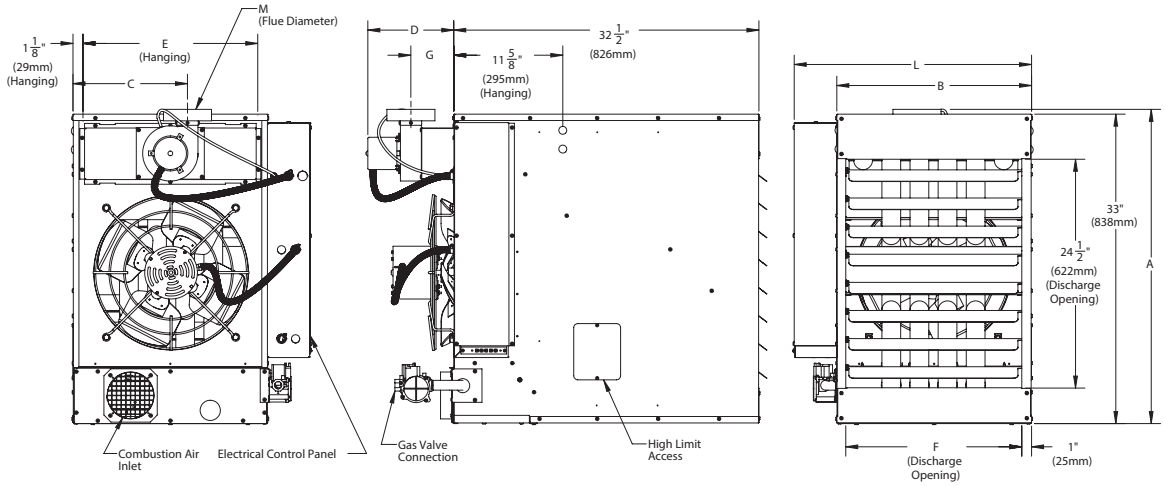

Rear View Side View Front View

CAT-10364_A

XC Series — Tubular Blower Unit Heater Performance and Dimensional Data

Unit Capacity (MBH)		100	125	150	175	200	250	300	350	400
PERFORMANCE DATA†										
Input - BTU/Hr.		100,000	125,000	150,000	175,000	200,000	250,000	300,000	350,000	400,000
(kW)		(29.3)	(36.6)	(44.0)	(51.3)	(58.6)	(73.3)	(87.9)	(102.6)	(117.2)
Output - BTU/Hr.		83,000	103,750	124,500	145,250	166,000	207,500	246,000	290,500	332,000
(kW)		(24.3)	(30.4)	(36.5)	(42.6)	(48.6)	(60.8)	(72.1)	(85.1)	(97.3)
Thermal Efficiency - %		83	83	83	83	83	83	82	83	83
Free Air Delivery - CFM		1,181	1,476	1,771	2,067	2,362	2,953	3,501	4,134	4,724
(cu. m/s)		(0.557)	(0.697)	(0.836)	(0.976)	(1.115)	(1.394)	(1.652)	(1.951)	(2.230)
Air Temperature Rise - °F		65	65	65	65	65	65	65	65	65
(°C)		(36)	(36)	(36)	(36)	(36)	(36)	(36)	(36)	(36)
Outlet Velocity - FPM		370	463	555	395	451	564	422	498	570
(m/s)		(1.879)	(2.351)	(2.819)	(2.006)	(2.291)	(2.864)	(2.143)	(2.529)	(2.895)
Full Load Amps at 115V		7.3	9.4	9.4	14.2	14.2	15.6	15.6	20.8	20.8
Min. Circuit Amps at 115V		8.6	11.2	11.2	17.1	17.1	18.9	18.9	25.4	25.4
MOTOR DATA:	Motor HP	1/4	1/2	1/2	3/4	3/4	1	1	1-1/2	1-1/2
	Motor kW	0.19	0.37	0.37	0.56	0.56	0.75	0.75	1.11	1.11
	Motor Type ODP**	SPH	SPH	SPH	SPH	SPH	Cap. Start	Cap. Start	Cap. Start	Cap. Start
	RPM	1,725	1,725	1,725	1,725	1,725	1,725	1,725	1,725	1,725
	Amps @ 115V††	5.3	7.2	7.2	11.6	11.6	13.0	13.0	18.2	18.2
DIMENSIONAL DATA - inches (mm)										
"A" Height to Top of Flue		33-3/4	33-3/4	33-3/4	33-3/4	33-3/4	33-3/4	34	34	34
		(857)	(857)	(857)	(857)	(857)	(857)	(864)	(864)	(864)
"B" Jacket Width of Unit		20-3/4	20-3/4	20-3/4	32-3/4	32-3/4	32-3/4	50-3/4	50-3/4	50-3/4
		(527)	(527)	(527)	(832)	(832)	(832)	(1289)	(1289)	(1289)
"C" Width to Centerline Flue		13-3/8	13-3/8	13-3/8	19-3/8	19-3/8	19-3/8	28-3/8	28-3/8	28-3/8
		(340)	(340)	(340)	(492)	(492)	(492)	(721)	(721)	(721)
"D" Depth to Front Hanger		21	21	21	21	21	21	21	21	21
		(533)	(533)	(533)	(533)	(533)	(533)	(533)	(533)	(533)
"E" Hanging Distance Width		18-5/8	18-5/8	18-5/8	30-5/8	30-5/8	30-5/8	48-5/8	48-5/8	48-5/8
		(473)	(473)	(473)	(778)	(778)	(778)	(1235)	(1235)	(1235)
"F" Hanging Distance Depth		19	19-1/2	19-1/2	32-3/4	32-3/4	32-3/4	23-1/2	32-3/4	32-3/4
		(483)	(495)	(495)	(832)	(832)	(832)	(597)	(832)	(832)
"G" Discharge Opening Width		18-3/4	18-3/4	18-3/4	30-3/4	30-3/4	30-3/4	48-3/4	48-3/4	48-3/4
		(476)	(476)	(476)	(781)	(781)	(781)	(1238)	(1238)	(1238)
"H" Depth to Centerline Flue		4-3/4	4-3/4	4-3/4	4-3/4	4-3/4	4-3/4	5-1/8	5-1/8	5-1/8
		(121)	(121)	(121)	(121)	(121)	(121)	(130)	(130)	(130)
"M" Overall Unit Width		25-1/4	25-1/4	25-1/4	37-1/4	37-1/4	37-1/4	55-1/4	55-1/4	55-1/4
		(641)	(641)	(641)	(946)	(946)	(946)	(1403)	(1403)	(1403)
"P" Overall Unit Depth		49-3/4	49-3/8	49-3/8	56-1/8	56-1/8	56-1/8	53-3/8	56-1/8	56-1/8
		(1264)	(1254)	(1254)	(1426)	(1426)	(1426)	(1356)	(1426)	(1426)
Combustion Air Inlet Dia. (Qty) - in		5	5	5	5	5	5	5 (2)	5 (2)	5 (2)
(mm)		(127)	(127)	(127)	(127)	(127)	(127)	(127)	(127)	(127)
*Flue Size Diameter - in		5	5	5	5	5	5	6	6	6
(mm)		(127)	(127)	(127)	(127)	(127)	(127)	(152)	(152)	(152)
Gas Inlet, Natural Gas - in		1/2	1/2	1/2	1/2	1/2	1/2	3/4	3/4	3/4
Gas Inlet, LP Gas - in		1/2	1/2	1/2	1/2	1/2	1/2	3/4	3/4	3/4
Approximate Unit Weight - lb		173	177	204	248	267	292	374	394	433
(kg)		(78)	(80)	(92)	(112)	(121)	(132)	(170)	(179)	(196)
Approximate Ship Weight - lb		258	263	291	384	403	428	524	551	599
(kg)		(117)	(119)	(132)	(174)	(183)	(194)	(238)	(250)	(272)

† Ratings shown are for unit installations at elevations between 0 and 2,000 ft (0 to 610m). For unit installations in U.S.A. above 2,000 ft. (610m), the unit input must be field derated 4% for each 1,000 ft. (305m) above sea level; refer to local codes, or in absence of local codes, refer to the latest edition of the National Fuel Gas Code, ANSI Standard Z223.1 (N.F.P.A. No. 54).

For installations in Canada, any reference to deration at altitudes in excess of 2,000 ft. (610m) are to be ignored. At altitudes of 2,000 ft. to 4,500 ft. (610 to 1372m), the unit must be field derated to 90% of the normal altitude rating, and be so marked in accordance with the ETL certification. See unit installation manual for field deration information.

†† See Table 5 in the unit installation manual for ODP motor full load amp values at non-standard voltages.

* Flue collar is factory supplied with unit; to be field installed per included instructions.

** LEGEND: SPH = SPLIT PHASE CAP. START = CAPACITOR START ODP = OPEN DRIP PROOF

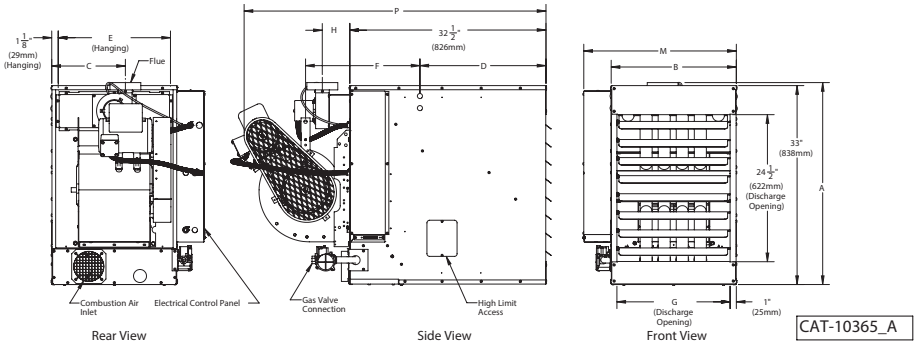

CAT-10365_A

XC Series — Tubular Blower Unit Heater Performance Data

Unit	Temp.Rise °F (°C)	CFM (cu. m/s)	External Static Pressure Inches WC (kPa)									
			0.1" (0.02)		0.2" (0.05)		0.3" (0.07)		0.4" (0.10)		0.5" (0.12)	
			RPM	HP (kW)	RPM	HP (kW)	RPM	HP (kW)	RPM	HP (kW)	RPM	HP (kW)
XC100	**50** (10)	1535 (0.724)	804	1/2 (0.37)	860	1/2 (0.37)	927	1/2 (0.37)	989	1/2 (0.37)	1045	1/2 (0.37)
	60 (15.5)	1279 (0.603)	649	1/4 (0.19)	760	1/4 (0.19)	821	1/4 (0.19)	890	1/4 (0.19)	963	1/4 (0.19)
	70 (21.1)	1096 (0.517)	633	1/4 (0.19)	700	1/4 (0.19)	779	1/4 (0.19)	858	1/4 (0.19)	920	1/4 (0.19)
	80 (26.6)	959 (0.452)	591	1/4 (0.19)	665	1/4 (0.19)	733	1/4 (0.19)	801	1/4 (0.19)	869	1/4 (0.19)
XC125	**50** (10)	1919 (0.905)	703	1/2 (0.37)	758	1/2 (0.37)	810	1/2 (0.37)	863	1/2 (0.37)	918	1/2 (0.37)
	60 (15.5)	1599 (0.754)	608	1/2 (0.37)	685	1/2 (0.37)	741	1/2 (0.37)	790	1/2 (0.37)	843	1/2 (0.37)
	70 (21.1)	1371 (0.647)	558	1/2 (0.37)	626	1/2 (0.37)	694	1/2 (0.37)	755	1/2 (0.37)	798	1/2 (0.37)
	80 (26.6)	1199 (0.565)	580	1/2 (0.37)	597	1/2 (0.37)	649	1/2 (0.37)	720	1/2 (0.37)	779	1/2 (0.37)
XC150	**50** (10)	2303 (1.087)	853	1/2 (0.37)	927	1/2 (0.37)	962	1/2 (0.37)	988	1/2 (0.37)	1040	1/2 (0.37)
	60 (15.5)	1919 (0.905)	755	1/2 (0.37)	810	1/2 (0.37)	845	1/2 (0.37)	894	1/2 (0.37)	939	1/2 (0.37)
	70 (21.1)	1645 (0.776)	649	1/2 (0.37)	726	1/2 (0.37)	790	1/2 (0.37)	836	1/2 (0.37)	876	1/2 (0.37)
	80 (26.6)	1439 (0.679)	616	1/2 (0.37)	670	1/2 (0.37)	720	1/2 (0.37)	785	1/2 (0.37)	840	1/2 (0.37)
XC175	**50** (10)	2687 (1.26)	522	3/4 (0.56)	566	3/4 (0.56)	612	3/4 (0.56)	652	3/4 (0.56)	688	3/4 (0.56)
	60 (15.5)	2239 (1.05)	468	3/4 (0.56)	514	3/4 (0.56)	564	3/4 (0.56)	609	3/4 (0.56)	654	3/4 (0.56)
	70 (21.1)	1919 (0.905)	423	3/4 (0.56)	471	3/4 (0.56)	527	3/4 (0.56)	582	3/4 (0.56)	624	3/4 (0.56)
	80 (26.6)	1697 (0.8)	402	3/4 (0.56)	482	3/4 (0.56)	515	3/4 (0.56)	567	3/4 (0.56)	609	3/4 (0.56)
XC200	**50** (10)	3071 (1.44)	592	3/4 (0.56)	627	3/4 (0.56)	670	3/4 (0.56)	702	3/4 (0.56)	748	3/4 (0.56)
	60 (15.5)	2559 (1.2)	526	3/4 (0.56)	561	3/4 (0.56)	597	3/4 (0.56)	647	3/4 (0.56)	688	3/4 (0.56)
	70 (21.1)	2193 (1.03)	468	3/4 (0.56)	519	3/4 (0.56)	556	3/4 (0.56)	612	3/4 (0.56)	653	3/4 (0.56)
	80 (26.6)	1919 (0.905)	432	3/4 (0.56)	481	3/4 (0.56)	537	3/4 (0.56)	593	3/4 (0.56)	638	3/4 (0.56)
XC250	**50** (10)	3839 (1.81)	734	1 (0.75)	766	1 (0.75)	802	1 1/2 (1.11)	836	1 1/2 (1.11)	863	1 1/2 (1.11)
	60 (15.5)	3199 (1.51)	626	1 (0.75)	668	1 (0.75)	700	1 (0.75)	749	1 (0.75)	780	1 (0.75)
	70 (21.1)	2742 (1.29)	545	1 (0.75)	593	1 (0.75)	633	1 (0.75)	680	1 (0.75)	718	1 (0.75)
	80 (26.6)	2399 (1.13)	494	1 (0.75)	555	1 (0.75)	590	1 (0.75)	642	1 (0.75)	680	1 (0.75)
XC300	**50** (10)	4551 (2.14)	734	1 (0.75)	766	1 (0.75)	802	1 1/2 (1.11)	836	1 1/2 (1.11)	863	1 1/2 (1.11)
	60 (15.5)	3792 (1.79)	626	1 (0.75)	668	1 (0.75)	700	1 (0.75)	749	1 (0.75)	780	1 (0.75)
	70 (21.1)	3259 (1.53)	545	1 (0.75)	593	1 (0.75)	633	1 (0.75)	680	1 (0.75)	718	1 (0.75)
	80 (26.6)	2844 (1.34)	494	1 (0.75)	555	1 (0.75)	590	1 (0.75)	642	1 (0.75)	680	1 (0.75)
XC350	**50** (10)	5374 (2.54)	558	1 1/2 (1.11)	598	1 1/2 (1.11)	638	1 1/2 (1.11)	676	1 1/2 (1.11)	727	1 1/2 (1.11)
	60 (15.5)	4478 (2.11)	484	1 1/2 (1.11)	532	1 1/2 (1.11)	588	1 1/2 (1.11)	653	1 1/2 (1.11)	680	1 1/2 (1.11)
	70 (21.1)	3839 (1.81)	451	1 1/2 (1.11)	503	1 1/2 (1.11)	559	1 1/2 (1.11)	609	1 1/2 (1.11)	654	1 1/2 (1.11)
	80 (26.6)	3359 (1.59)	408	1 1/2 (1.11)	480	1 1/2 (1.11)	536	1 1/2 (1.11)	589	1 1/2 (1.11)	621	1 1/2 (1.11)
XC400	**50** (10)	6142 (2.9)	647	1 1/2 (1.11)	659	1 1/2 (1.11)	670	1 1/2 (1.11)	713	1 1/2 (1.11)	751	2 (1.49)
	60 (15.5)	5118 (2.41)	553	1 1/2 (1.11)	570	1 1/2 (1.11)	618	1 1/2 (1.11)	653	1 1/2 (1.11)	697	1 1/2 (1.11)
	70 (21.1)	4387 (2.07)	483	1 1/2 (1.11)	523	1 1/2 (1.11)	568	1 1/2 (1.11)	615	1 1/2 (1.11)	660	1 1/2 (1.11)
	80 (26.6)	3839 (1.81)	437	1 1/2 (1.11)	490	1 1/2 (1.11)	547	1 1/2 (1.11)	589	1 1/2 (1.11)	655	1 1/2 (1.11)

TD Series — Tubular Duct Furnaces

Indoor Duct Furnace

DESCRIPTION
The TD Series duct furnace is designed for use with existing systems for any ducted air application. Sterling HVAC indoor tubular duct furnaces are available in 7 sizes (100 – 400 MBH). Sterling HVAC products are proudly manufactured in the USA.

Standard energy saving features like the direct spark ignition and power venting reduce standby losses and offer improved seasonal efficiencies. The TD Series is certified by ETL as providing 82% thermal (combustion) efficiency.



TD-400

TUBULAR HEAT EXCHANGER
The Sterling HVAC tubular heat exchanger has been designed to provide maximum and uniform heat transfer. The low pressure drop associated with this design enables heated air to be evenly distributed to the conditioned space. This curved, non-welded serpentine design experiences less thermally induced stress making it highly durable for significantly longer service life. All standard Sterling HVAC tubular heat exchangers are constructed of heavy duty 20-gauge aluminized steel with an optional 409 stainless steel heat exchanger available for applications in mildly corrosive environments.



TD-100

DIRECT SPARK IGNITION SYSTEM
Sterling HVAC TD units utilize a direct spark pilotless ignition of the burner, providing fast heat delivery. This highly reliable and efficient ignition system incorporates an integrated electronic control board to regulate the system sequence of operation, including an externally mounted LED indicator for simple troubleshooting.

VENTING
The Sterling HVAC TD Series is ETL certified in accordance with category III venting requirements. This certification allows units to be vented both vertically and horizontally using either single wall or double wall venting materials. This venting flexibility of the TD duct furnace makes installation easier and more cost effective by allowing the installer to utilize existing venting components. The TD duct furnace can be field converted to separated combustion using the “Air Inlet Kit” or the “Combustion Air Inlet Kit”. This is recommended for units to be installed in dusty, dirty or mildly corrosive environments or where high humidity or slightly negative pressures exist. All critical components including the burners, direct spark ignition, and controls are fully enclosed within the unit and protected from the elements ensuring clean and efficient combustion.

CONTROL ACCESSIBILITY
Designed with the service person in mind, every component of the Sterling HVAC TD Series is easily accessible. Ignition and fan controls are located in one centrally located control panel. The access panel provides control isolation as well as a pleasing exterior appearance.

TD Series — Tubular Duct Furnace

STANDARD FEATURES

- In-Shot Burner Design
- 20-Gauge Steel Jacket with Baked Enamel Finish
- Double Wall Construction
- 115/1/60 Supply Voltage
- Direct Spark Ignition
- Redundant Single-Stage Gas Valve
- 82% Thermal Efficiency
- 115/24 Volt Controls Transformer
- Power Vented
- 20-Gauge Aluminized Steel Heat Exchanger
- Four Point Suspension
- For Natural or Propane Gas
- 10-Year Heat Exchanger, Flue Collector and Burner Warranty
- Easy Access Control Panel
- Left Hand Control Access – Field Convertible to Right Hand

OPTIONAL FEATURES

- 409 Stainless Steel Heat Exchanger and Flue Collector
- Supply Voltages (Field Mounted Transformer): 208 & 230/1/60 and 208, 230, 460, 575/3/60
- Two-Stage and Various Electronic Modulation Gas Controls
- High Pressure Regulator 1/2 - 35 PSI
- Single and Two-Stage Mercury Free Ductstats and Thermostats
- Locking Thermostat Cover
- Low Ambient Control
- Vent Caps
- 24V SPST Relay
- Stainless Steel Drip Pan
- Horizontal and Vertical Louvers
- Air Inlet Kit (For conversion to separated combustion and two roof or wall penetrations. Includes a vent cap for the combustion air inlet pipe)
- Combustion Air Inlet Kit (For conversion to separated combustion and a single roof or wall penetration)

Unit Number Description

Digit	T	X	X	X	—	1	2	3	4	5	6	7	8	9	10	11	12	13	14	15	+
Item	Prefix					UT		CA			FT	FM	GT	AL	GC	SV	MT	MS	DL	AS	

(Internal use Only)

1, 2 - Unit Type [UT]
TD - Tubular Duct Furnace

3, 4, 5 - Capacity [CA]
100 - 100,000 BTU/HR
150 - 150,000 BTU/HR
200 - 200,000 BTU/HR
250 - 250,000 BTU/HR
300 - 300,000 BTU/HR
350 - 350,000 BTU/HR
400 - 400,000 BTU/HR

6 - Furnace Type [FT]
A - Left Side Access
Note: Field convertible to right side access; refer to unit installation instructions.

7 - Heat Exchanger (Furnace) Material [FM]
1 - Aluminized Steel (Standard)
2 - 409 Stainless Steel
Note: Heat Exchanger Material [FM] selection includes flue collector material.

8 - Gas Type [GT]
N - Natural Gas
P - Propane Gas (LP)

9 - Altitude [AL]
S - 0–4,999 feet
T - 5,000–11,999 feet
Note: Installations over 2,000 feet require gas input deration in the field. Refer to unit installation instructions.

10 - Direct Spark Gas Control [GC]
1 - Single Stage
2 - Two Stage
3 - Electronic Modulation w/Room Sensing
4 - Electronic Modulation w/Duct Sensing
5 - Electronic Modulation w/Duct Sensing & Room Override Stat
6 - Electronic Modulation w/External 4-20 mA Input
7 - Electronic Modulation w/External 0-10 VDC Input

11 - Supply Voltage [SV]
1 - 115/1/60 **5** - 230/3/60
2 - 208/1/60 **6** - 460/3/60
3 - 230/1/60 **7** - 575/3/60
4 - 208/3/60 **Z** - Special
Note: Supply Voltages [SV] 2-7 include field mounted step down transformer.

12 - Motor Type [MT]
0 - None/Not Applicable

13 - Motor Sizes [MS]
0 - None/Not Applicable

14 - Design Level [DL]
A - First Design Level

15+ - Accessories [AS]

FACTORY INSTALLED
K5 - Air Flow Prove Switch

P4 - Terminal Block Wiring
P6 - Summer/Winter Switch

S5 - Stainless Steel Burners

† FIELD INSTALLED (AS-____)
† All Field Installed Accessories are to be entered as a separate line item using the catalog number which utilizes "11AS" as a prefix. i.e: G3 becomes 11AS-G3.

A7 - High Pressure Regulator
A7 - 1/2-1 Regulator for 0.5-10 PSI
A7 - 3/8-1 Regulator for 10-20 PSI
A7 - 5/16-1 Regulator for 20-35 PSI

F1 - 1-Stage T675A Ductstat
F2 - 2-Stage T678A Ductstat

G1 - 1-Stage Mercury Free Thermostat (Round)
G2 - 1-Stage Mercury Free Thermostat w/Guard Kit
G3 - 1-Stage Mercury Free Thermostat/Fan Switch
G5 - 2-Stage Mercury Free Thermostat w/Fan Switch
G6 - Locking Thermostat Cover
G9 - 1-Stage Mercury Free Heating Only Thermostat
GW - WiFi Thermostat TH8321WF1001/U

H5 - Low Ambient Control

M2-2 - Vent Caps (5") (Unit Capacity 100-250)
M2-3 - Vent Caps (6") (Unit Capacity 300-400)

P5 - 24V SPST Relay-Specify Purpose

S4 - Stainless Steel Drip Pan

X5 - Horizontal and Vertical Louver Kit
X8-H5 - Horizontal Combustion Air Inlet Kit, 5 inch (Unit Capacity 100-200)
X8-H6 - Horizontal Combustion Air Inlet Kit, 6 inch (Unit Capacity 250-400)
X8-V5 - Vertical Combustion Air Inlet Kit, 5 inch (Unit Capacity 100-200)
X8-V6 - Vertical Combustion Air Inlet Kit, 6 inch (Unit Capacity 250-400)
X9-DBL-5 - Air Inlet Kit, 5 inch (Unit Capacity 100-200)
X9-DBL-6 - Air Inlet Kit, 6 inch (Unit Capacity 250-400)
Note: X9 kits allow for conversion to separated combustion and include the M2 vent cap for the combustion air inlet pipe. X8 kits allow for conversion to separated combustion and venting concentrically through one roof or wall penetration.

TD Series — Tubular Duct Furnace Dimensional Data

Tubular Duct Furnace Dimensions

Unit Capacity (MBH)	100	150	200	250	300	350	400
Dimensional Data - inches (mm)							
"A" Overall Unit Height	10.3	13.7	17	20.2	23.5	26.7	30
	(262)	(348)	(432)	(513)	(597)	(678)	(762)
"B" Height to Centerline Flue	7.6	10.5	11.9	6.8	8.4	10	11.6
	(193)	(267)	(302)	(173)	(213)	(254)	(295)
"C" Height to Gas Connection	2.5	3.7	5.3	7	7	8.7	10.3
	(64)	(94)	(135)	(178)	(178)	(221)	(262)
"D" Opening Height, Front & Rear	8.5	11.7	15	18.2	21.5	24.7	28
	(216)	(297)	(381)	(462)	(546)	(627)	(711)
"E" Overall Unit Depth	32.7	32.7	32.7	33.5	33.5	33.5	33.5
	(831)	(831)	(831)	(851)	(851)	(851)	(851)
"F" Flue Size Diameter	5	5	5	6	6	6	6
	(127)	(127)	(127)	(152)	(152)	(152)	(152)
"G" Air Inlet Size Diameter	5	5	5	6	6	6	6
	(127)	(127)	(127)	(152)	(152)	(152)	(152)
Gas Inlet, Natural Gas - inch	1/2	1/2	1/2	3/4	3/4	3/4	3/4
Gas Inlet, LP Gas - inch	1/2	1/2	1/2	3/4	3/4	3/4	3/4
Approximate Unit Weight - lb	160	221	250	270	296	321	355
(kg)	(73)	(100)	(113)	(122)	(134)	(146)	(161)
Approximate Ship Weight - lb	270	331	360	403	429	454	488
(kg)	(122)	(150)	(163)	(183)	(195)	(206)	(221)

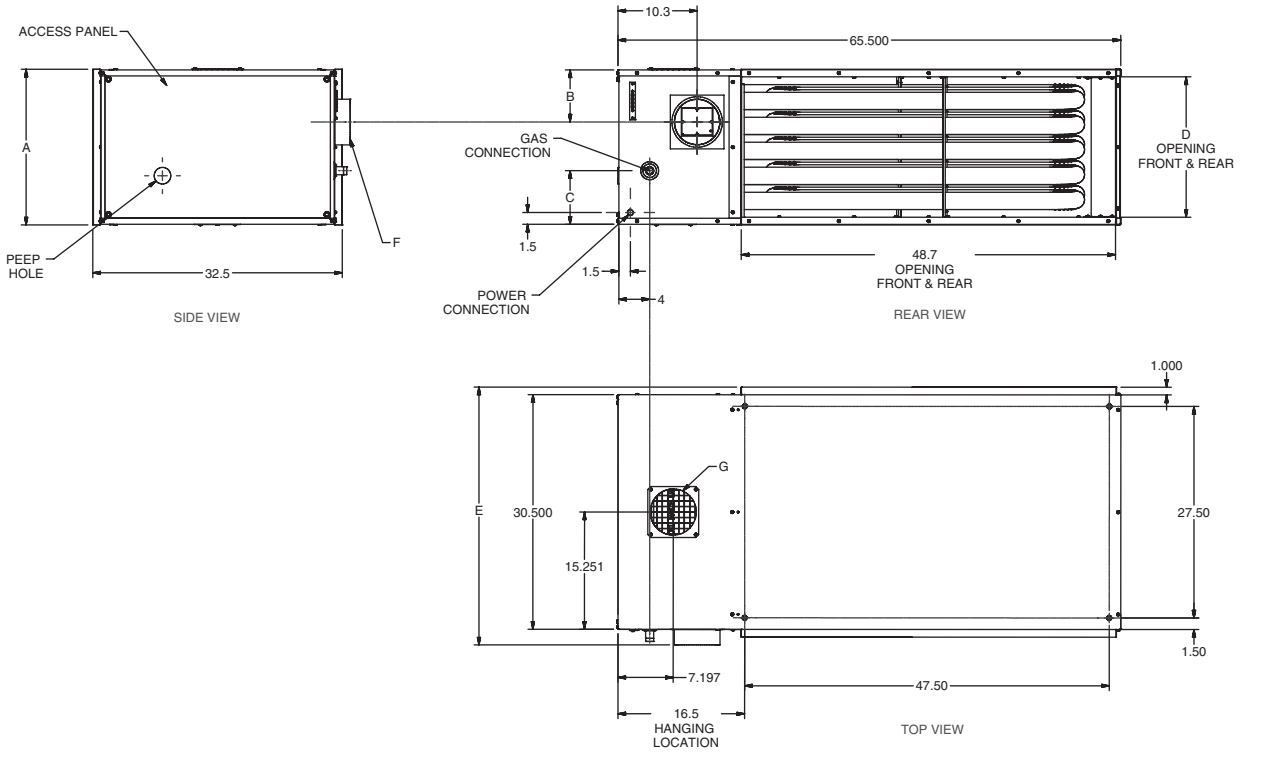

TD Series — Tubular Duct Furnace Performance Data

C ETL LISTED US Intertek

Tubular Duct Furnace Performance Data

UNIT CAPACITY (MBH)	100	150	200	250	300	350	400
Maximum Input - MBH	100	150	200	250	300	350	400
(kW)	(29.3)	(43.9)	(58.6)	(73.2)	(87.8)	(102.5)	(117.1)
Minimum Input - MBH	50	75	100	125	150	175	200
(kW)	(14.6)	(21.9)	(29.3)	(36.6)	(43.9)	(51.2)	(58.6)
Output - MBH	82	123	164	205	246	287	328
(kW)	(24.0)	(36.0)	(48.0)	(60.0)	(72.0)	(84.1)	(96.1)
Full Load Amps at 115V	2.2	2.2	2.2	1.8	1.8	1.8	1.8
Minimum Circuit Amps at 115V	2.5	2.5	2.5	1.9	1.9	1.9	1.9
Minimum CFM	758	1137	1517	1896	2275	2654	3034
(m^3/s)	(0.357)	(0.536)	(0.715)	(0.894)	(1.074)	(1.252)	(1.431)
Temperature Rise - °F	100	100	100	100	100	100	100
(°C)	(56)	(56)	(56)	(56)	(56)	(56)	(56)
Pressure Drop - in. WC	0.07	0.03	0.04	0.08	0.03	0.07	0.08
(kPa)	(0.017)	(0.007)	(0.009)	(0.019)	(0.007)	(0.017)	(0.019)
Maximum CFM	2528	3792	5057	6321	7585	8849	10,114
(m^3/s)	(1.193)	(1.789)	(2.386)	(2.983)	(3.579)	(4.176)	(4.773)
Temperature Rise - °F	30	30	30	30	30	30	30
(°C)	(17)	(17)	(17)	(17)	(17)	(17)	(17)
Pressure Drop - in. WC	0.65	0.44	0.54	0.76	0.69	0.76	0.70
(kPa)	(0.16)	(0.11)	(0.13)	(0.19)	(0.16)	(0.19)	(0.17)

Ratings are shown for unit installations at elevations between 0 and 2,000 feet (610m). For unit installations in USA above 2,000 feet (610m), the unit input must be field derated 4% for each 1,000 feet (305m) above sea level; refer to local codes, or in absence of local codes, refer to the latest edition of the National Fuel Gas Code, ANSI Standard Z223.1 (NFPA 54). For installations in Canada, any references to deration at altitudes in excess of 2,000 feet (610m) are to be ignored. At altitudes of 2,000 to 4,500 feet (610 to 1372m), the unit must be field derated and be so marked in accordance with the ETL certification. See Installation Instructions for USA and Canadian field deration information.

Temperature Rise and Pressure Drop Graph

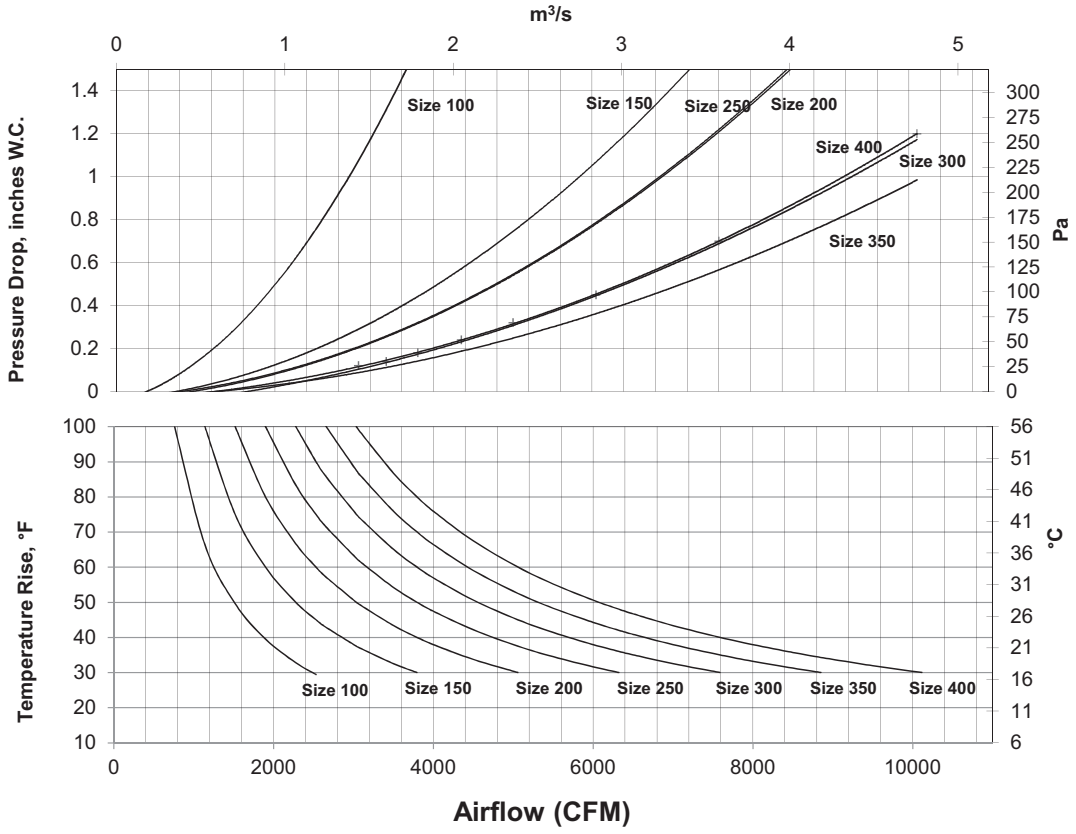

Duct Furnaces

- **QVED SERIES**
- **QVES SERIES**
- **QVSD SERIES**

Indoor Duct Furnace

Sterling HVAC's line of high efficient indoor duct furnaces are designed for ducted air applications. Indoor duct furnaces are designed for use with existing systems for heating, heating/cooling or make-up air systems. Sterling's indoor duct furnaces are available in 7 sizes (100 – 400 MBH) and equipped with electronic spark ignition (100% safety shutoff on LP models), 115 volt power, vent system pressure switch, high limit switch and 24 volt control transformer.

All duct furnaces are ETL certified for installation upstream or downstream from cooling coils (stainless steel heat exchangers are recommended).

Sterling HVAC's products are proudly manufactured in the USA.

HEAT EXCHANGERS
All heat exchangers feature 20-gauge tubes and 18-gauge headers and are available in 3 types of steel:

- Aluminized Steel (Standard)
- 409 Grade Stainless Steel (Optional)
- 321 Grade Stainless Steel (Optional)
- Stainless steel heat exchangers recommended for applications where entering air is below 40°F (4.4°C) and/or duct furnaces are located downstream from cooling coils.

APPLICATIONS
Sterling's duct furnaces are available in variable configurations to meet all application needs. QVED models offer bottom burner access for servicing the internal unit components such as burners and the heat exchanger. QVES models offer side service burner access for applications where clearances beneath the duct furnace will not allow bottom access. QVED and QVES both come standard with right side access for gas and wiring (when looking in the direction of airflow), with left side access being optional.

The QVSD (separated combustion) is designed to be installed in dusty, dirty or mildly corrosive environments, or where high humidity or slightly negative pressures exist. All critical components including the burners, pilot and flue systems are fully enclosed within the unit and protected from the elements insuring clean and efficient combustion. QVSD units are perfect for manufacturing and automotive facilities and greenhouse applications. For application flexibility, QVSD comes standard with left side access for gas and wiring (when looking in the direction of airflow), with right side access being optional. A combustion air inlet kit is available for applications requiring concentric venting.



QVED/QVES Series (Standard Vent Position)



QVED/QVES Series (With Optional Top Vent Position)



QVSD Series

QVED/QVES Series — Power Vented Duct Furnace
QVSD — Separated Combustion Duct Furnace

STANDARD FEATURES

- QVED – Bottom Access Panel
- QVES – Side Access Panel, Right Side
- QVSD – Separated Combustion
- 80% Thermal Efficiency
- Aluminized Steel Heat Exchanger – 20-gauge
- Aluminized Steel Burners with Stainless "Burner Shade Port Protector"
- For Natural and Propane Gases
- Aluminized Steel Flue Collector
- 115/1/60 Supply Voltage
- Spark Ignited Intermittent Pilot with Electronic Flame Supervision
- Power Vented
- Redundant Single Stage Combustion Gas Valve
- High Limit Switch
- Control Transformer, 115/24V
- Combustion Air Pressure Switch
- Adjustable Burner Air Shutters
- Four Point Suspension
- QVSD – Enclosed Combustion System
- 20-Gauge Steel Cabinet with Baked Enamel Finish
- QVSD – Combustion Air/ Flue Connections (see Vent Caps; Two Required per Unit)

Unit Number Description

Digit	X	X	X	X	–	1	2	3	4	5	6	7	8	9	10	11	12	13	14	15	+
Item	Prefix (Internal use Only)					UT		CA			FT	FM	GT	IC	AL	GC	SV	MT	MS	AS	

Digit #1, 2 - Unit Type [UT]
QVED (D2) - Power Vented Duct Furnace
QVSD (D3) - Separated Combustion Duct Furnace
QVES (D6) - Side Service Power Vented Duct Furnace

Digit #3, 4, 5 - Capacity [CA]
100 - 100,000 BTU/HR
150 - 150,000 BTU/HR
200 - 200,000 BTU/HR
250 - 250,000 BTU/HR
300 - 300,000 BTU/HR
350 - 350,000 BTU/HR
400 - 400,000 BTU/HR

Digit #6 - Furnace Type [FT]
A - Right Side Access
(Standard on QVED, QVES; Optional on QVSD)
B - Left Side Access
(Standard on QVSD; Optional on QVED, QVES)

Digit #7 - Heat Exchanger Construction Material [FM]
1 - Aluminized Steel
2 - 409 Stainless Steel
3 - 321 Stainless Steel

Digit #8 - Gas Type [GT]
N - Natural Gas
P - Propane Gas (LP)
K - Natural Gas w/100% Shutoff

Digit #9 - Ignition Control [IC]
2 - Spark Ignition

Digit #10 - Altitude [AL]
A - 0-1,999 feet
B - 2,000-2,999 feet
C - 3,000-3,999 feet
D - 4,000-4,999 feet
F - 5,000-5,999 feet
G - 6,000-6,999 feet
H - 7,000-7,999 feet
J - 8,000-8,999 feet
K - 9,000-9,999 feet
L - 10,000-10,999 feet
M - 11,000-11,999 feet
N - Local Gas Supplier Derate
P - Canadian High Altitude 2,000-4,500 feet

Digit #11 - Gas Control [GC]
A - Single Stage
B - Two Stage
H - Electronic Modulation w/Room Sensing
J - Electronic Modulation w/Duct Sensing
K - Electronic Modulation w/Duct Sensing & Room Ovrd. Stat
L - Electronic Modulation w/External 4-20 mA Input
N - Electronic Modulation w/External 0-10 VDC Input

Digit #12 - Supply Voltage [SV]
1 - 115/1/60
2 - 208/1/60
3 - 230/1/60
4 - 208/3/60
5 - 230/3/60
6 - 460/3/60
7 - 575/3/60
Z - Special
Note: Supply Voltages [SV] 2-7 include field mounted step down transformer.

Digit #13 - Motor Type [MT]
0 - None/Not Applicable

Digit #14 - Motor Sizes [MS]
0 - None/Not Applicable

Digit #15 - Accessories [AS]

FACTORY INSTALLED
A8 - Input Derate
K4 - Fan Time Delay
K5 - Air Flow Prove Switch
P4 - Terminal Block Wiring
P6 - Summer/Winter Switch
S1 - 409 Stainless Steel Burners
S3 - 409 Stainless Steel Flue Collector

† FIELD INSTALLED (AS-____)
†Field Installed Accessories are not included in the Unit Number. All Field Installed Accessories are entered as a separate line item using the catalog number which utilizes "11AS" as a prefix. i.e: G3 becomes 11AS-G3.

A7 - High Pressure Regulator
A7 - 1/2-1 Regulator for 0.5-10 PSI
A7 - 3/8-1 Regulator for 10-20 PSI
A7 - 5/16-1 Regulator for 20-35 PSI

F1 - 1-Stage T675A Ductstat
F2 - 2-Stage T678A Ductstat

G1 - 1-Stage Mercury Free Thermostat (Round)
G2 - 1-Stage Mercury Free Thermostat w/Guard Kit
G3 - 1-Stage Mercury Free Thermostat/Fan Switch
G5 - 2-Stage Mercury Free Thermostat w/Fan Switch
G6 - Locking Thermostat Cover
G9 - 1-Stage Mercury Free Heating Only Thermostat

H5 - Low Ambient Control

M2-1 - Vent Caps (4") (Unit Capacity 100-150)
M2-2 - Vent Caps (5") (Unit Capacity 200-250
M2-3 - Vent Caps (6") (Unit Capacity 300-400)
M3-1 - Adaptors (5"-4") (Unit Capacity 100-150)
M4 - Vertical Combustion Air Inlet Kit
M5 - Horizontal Combustion Air Inlet Kit

P2 - Adjustable High Limit Switch
P3 - Adjustable Fan Switch
P5 - 24V SPST Relay-Specify Purpose

Q7 - Horizontal/Vertical Louvers

S4 - 409 Stainless Drip Pan (Only available on QVED and QVES)

QVED/QVES Series — Power Vented Duct Furnace Performance and Dimensional Data

UNIT CAPACITY (MBH)	100	150	200	250	300	350	400
PERFORMANCE DATA†							
Input (Maximum) - BTU/Hr.	100,000	150,000	200,000	250,000	300,000	350,000	400,000
(kW)	(29.3)	(44.0)	(58.6)	(73.3)	(87.9)	(102.6)	(117.2)
Input (Minimum) - BTU/Hr.	50,000	75,000	100,000	125,000	150,000	175,000	200,000
(kW)	(14.6)	(22.0)	(29.3)	(36.6)	(44.0)	(51.3)	(58.6)
Output - BTU/Hr.	80,000	120,000	160,000	200,000	240,000	280,000	320,000
(kW)	(23.4)	(35.1)	(46.9)	(58.6)	(70.3)	(82.0)	(93.7)
Thermal Efficiency - %	80	80	80	80	80	80	80
Free Air Delivery (Minimum) - CFM	929	1,389	1,852	2,315	2,778	3,241	3,704
(cu. m/s)	(0.438)	(0.656)	(0.874)	(1.093)	(1.311)	(1.530)	(1.748)
Air Temperature Rise - °F	80	80	80	80	80	80	80
(°C)	(44)	(44)	(44)	(44)	(44)	(44)	(44)
Pressure Drop - Inches WC	0.12	0.15	0.14	0.14	0.13	0.13	0.14
(kPa)	(0.03)	(0.04)	(0.03)	(0.03)	(0.03)	(0.03)	(0.03)
Free Air Delivery (Maximum) - CFM	2,469	3,704	4,938	6,173	7,407	8,642	9,877
(cu. m/s)	(1.165)	(1.748)	(2.331)	(2.914)	(3.496)	(4.079)	(4.662)
Air Temperature Rise - °F	30	30	30	30	30	30	30
(°C)	(17)	(17)	(17)	(17)	(17)	(17)	(17)
Pressure Drop - Inches WC	0.90	0.75	0.75	0.80	0.90	0.90	0.90
(kPa)	(0.22)	(0.19)	(0.19)	(0.20)	(0.22)	(0.22)	(0.22)
DIMENSIONAL DATA - Inches (mm)							
"A" Overall Unit Width	17-7/8	20-5/8	26-1/8	31-5/8	37-1/8	42-5/8	48-1/8
	(454)	(524)	(664)	(803)	(943)	(1083)	(1222)
"B" Discharge Opening	15-1/2	18-1/4	23-3/4	29-1/4	34-3/4	40-1/4	45-3/4
	(394)	(464)	(603)	(743)	(883)	(1022)	(1162)
"C" Hanging Distance Width	17-1/8	19-7/8	25-3/8	30-7/8	36-3/8	41-7/8	47-3/8
	(435)	(505)	(645)	(784)	(924)	(1064)	(1203)
"D" Flue Opening Diameter*	4	4	5	5	6	6	6
	(102)	(102)	(127)	(127)	(152)	(152)	(152)
"F" Clearance for Burner Drawer	23-7/8	26-5/8	32-1/8	37-5/8	43-1/8	48-5/8	54-1/8
Access (Side Access Type Only)	(606)	(676)	(816)	(956)	(1095)	(1235)	(1375)
Gas Inlet, Natural Gas - Inches	1/2	1/2	1/2	3/4	3/4	3/4	3/4
Gas Inlet, LP Gas - Inches	1/2	1/2	1/2	3/4	3/4	3/4	3/4
Approximate Ship Weight - lb	173	197	232	263	312	389	403
(kg)	(78)	(89)	(105)	(119)	(142)	(176)	(183)

† Ratings shown are for unit installations at elevations between 0 and 2,000 feet (0 to 610m). For unit installations in U.S.A. above 2,000 feet (610m), the unit input must be derated 4% for each 1,000 feet (305m) above sea level; refer to local codes, or in absence of local codes, refer to the latest edition of the National Fuel Gas Code, ANSI Standard Z223.1 (NFPA No. 54).

For installations in Canada, any reference to deration at altitudes in excess of 2,000 feet (610m) are to be ignored. At altitudes of 2,000 feet to 4,500 feet (610 to 1372m), the unit must be derated and be so marked in accordance with the ETL certification. See unit installation, operation and maintenance manual for deration information.

* Flue collar is factory supplied with unit; to be field installed per included instructions.

Temperature Rise and Pressure Drop Graph

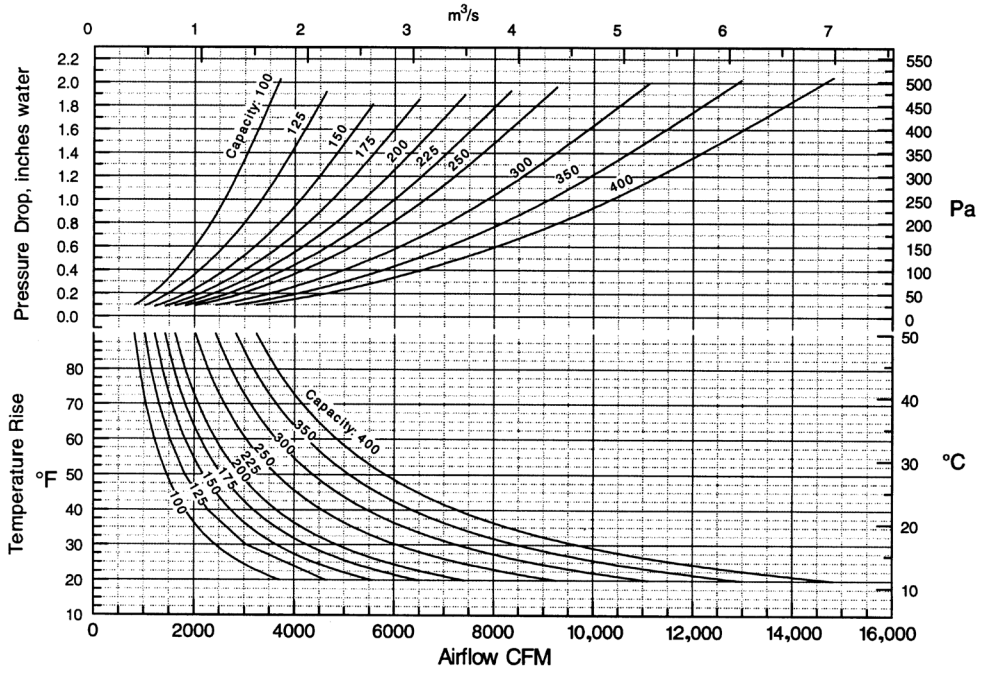

QVED/QVED Series — Power Vented Duct Furnace Dimensional Data

QVED Power Vented Duct Furnace — Bottom Service Access

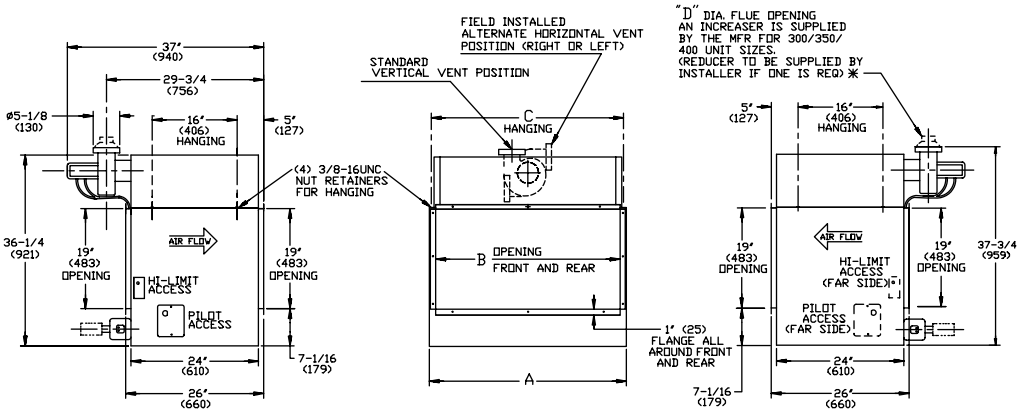

REAR VENT POSITION SHOWN SEE DETAIL G FOR OPTIONAL TOP VENT POSITION

QVES Power Vented Duct Furnace — Side Service Access

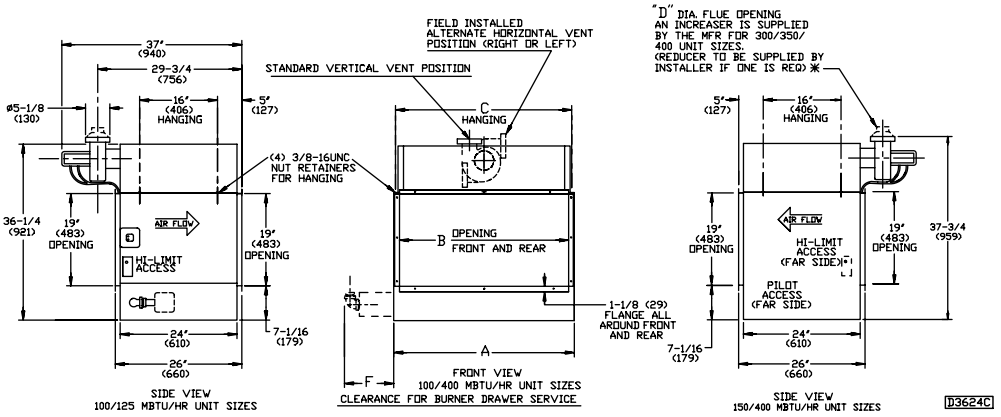

* CANADIAN UNITS INCLUDE VENT CAP AND REDUCER (IF REQ'D).
REAR VENT POSITION SHOWN SEE DETAIL G FOR OPTIONAL TOP VENT POSITION

Detail G — Optional Top Vent Position

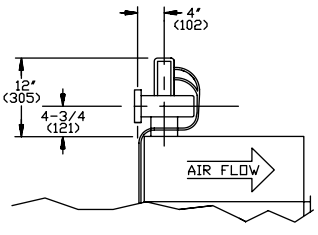

DETAIL G

POSITIONS - FRONT - REAR - RIGHT - LEFT

DIMENSIONS XX" STANDARD UNITS
DIMENSIONS IN PARENTHESIS (XX) MILLIMETERS D3616A

QVSD Series — Separated Combustion Duct Furnace Performance and Dimensional Data

UNIT CAPACITY (MBH)	100	150	200	250	300	350	400
PERFORMANCE DATA†							
Input (Maximum) - BTU/Hr.	100,000	150,000	200,000	250,000	300,000	350,000	400,000
(kW)	(29.3)	(44.0)	(58.6)	(73.3)	(87.9)	(102.6)	(117.2)
Input (Minimum) - BTU/Hr.	50,000	75,000	100,000	125,000	150,000	175,000	200,000
(kW)	(14.6)	(22.0)	(29.3)	(36.6)	(44.0)	(51.3)	(58.6)
Output - BTU/Hr.	80,000	120,000	160,000	200,000	240,000	280,000	320,000
(kW)	(23.4)	(35.1)	(46.9)	(58.6)	(70.3)	(82.0)	(93.7)
Thermal Efficiency - %	80	80	80	80	80	80	80
Free Air Delivery (Minimum) - CFM	822	1,233	1,645	2,056	2,467	2,878	3,289
(cu. m/s)	(0.388)	(0.582)	(0.776)	(0.970)	(1.164)	(1.358)	(1.552)
Air Temperature Rise - °F	90	90	90	90	90	90	90
(°C)	(50)	(50)	(50)	(50)	(50)	(50)	(50)
Pressure Drop - Inches WC	0.10	0.09	0.09	0.09	0.10	0.10	0.10
(kPa)	(0.02)	(0.02)	(0.02)	(0.02)	(0.02)	(0.02)	(0.02)
Free Air Delivery (Maximum) - CFM	3,700	5,550	7,401	9,251	11,101	12,951	14,801
(cu. m/s)	(1.746)	(2.620)	(3.493)	(4.366)	(5.240)	(6.113)	(6.986)
Air Temperature Rise - °F	20	20	20	20	20	20	20
(°C)	(11)	(11)	(11)	(11)	(11)	(11)	(11)
Pressure Drop - Inches WC	2.03	1.81	1.90	1.96	2.00	2.02	2.05
(kPa)	(0.51)	(0.45)	(0.47)	(0.49)	(0.50)	(0.50)	(0.51)
DIMENSIONAL DATA - Inches (mm)							
"A" Overall Unit Width	17-7/8	20-5/8	26-1/8	31-5/8	37-1/8	42-5/8	48-1/8
	(454)	(524)	(664)	(803)	(943)	(1083)	(1222)
"B" Discharge Opening	15-1/2	18-1/4	23-3/4	29-1/4	34-3/4	40-1/4	45-3/4
	(394)	(464)	(603)	(743)	(883)	(1022)	(1162)
"C" Hanging Distance Width	17-1/8	19-7/8	25-3/8	30-7/8	36-3/8	41-7/8	47-3/8
	(435)	(505)	(645)	(784)	(924)	(1064)	(1203)
"D" Flue Opening Diameter*	4	4	5	5	6	6	6
	(102)	(102)	(127)	(127)	(152)	(152)	(152)
Gas Inlet, Natural Gas - Inches	1/2	1/2	1/2	3/4	3/4	3/4	3/4
Gas Inlet, LP Gas - Inches	1/2	1/2	1/2	3/4	3/4	3/4	3/4
Approximate Ship Weight - lb	161	188	227	266	305	344	383
(kg)	(73)	(85)	(103)	(121)	(138)	(156)	(174)

† Ratings shown are for unit installations at elevations between 0 and 2,000 feet (0 to 610m). For unit installations in U.S.A. above 2,000 feet (610m), the unit input must be derated 4% for each 1,000 feet (305m) above sea level; refer to local codes, or in absence of local codes, refer to the latest edition of the National Fuel Gas Code, ANSI Standard Z223.1 (NFPA No. 54).

For installations in Canada, any reference to deration at altitudes in excess of 2,000 feet (610m) are to be ignored. At altitudes of 2,000 feet to 4,500 feet (610 to 1372m), the unit must be derated and be so marked in accordance with the ETL certification. See unit installation, operation and maintenance manual for deration information.

* Flue collar is factory supplied with unit; to be field installed per included instructions.

QVSD Separated Combustion Duct Furnace — Bottom Service Access Only

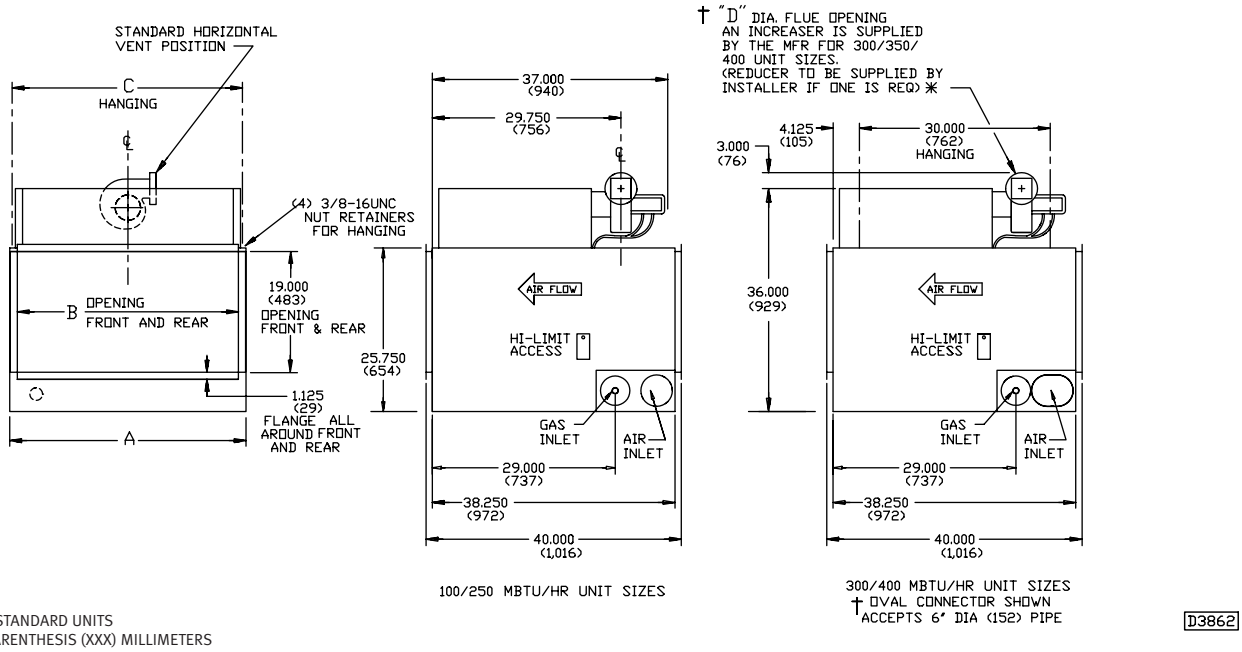

DIMENSIONS XXX STANDARD UNITS
DIMENSIONS IN PARENTHESIS (XXX) MILLIMETERS

CAB Series — Cabinet Blower

STANDARD FEATURES

- Sterling Cabinet Blowers have been especially designed for use with Sterling Duct Furnaces (models QVED, QVES, and QVSD only; not compatible with model TD).
- Duct Flange at rear to facilitate attaching Ductwork.
- Side panels removable for inspection, servicing and motor maintenance.
- Specify Unit Number of both Cabinet Blower and Duct Furnace on Order, thus CAB2 150 indicates CAB2 Blower with 150,000 BTU Duct Furnace.
- Four sizes provide CFM capacities ranging from 1,250 to 8,000 CFM (0.59 to 3.78 m^3/s).
- Sheet metal duct transition pieces for connecting Cabinet Blower to Duct Furnace are furnished only with Sterling Cabinet Blower-Duct Furnace combinations.
- Cabinet finished in baked enamel.

Unit Number Description

Digit	C	X	X	X	—	1	2	3	4	5	6	7	8	9	10	11	+
Item	Prefix					UT				CA			SV	MT	MS	AS	

(Internal use Only)

1, 2, 3, 4 - Unit Type [UT]
CAB1 - Cabinet Blower Size 1
CAB2 - Cabinet Blower Size 2
CAB3 - Cabinet Blower Size 3
CAB4 - Cabinet Blower Size 4

5, 6, 7 - Furnace Capacity [CA]*
100 - 100,000 BTU/HR
150 - 150,000 BTU/HR
200 - 200,000 BTU/HR
250 - 250,000 BTU/HR
300 - 300,000 BTU/HR
350 - 350,000 BTU/HR
400 - 400,000 BTU/HR
000 - No Transition Required
* Indicates transition duct size needed for corresponding QVED, QVES, or QVSD Duct Furnace. Refer to "Compatible Duct Furnace Capacity" indicated in the table on page 30. Transition duct pieces are provided with all Furnace Capacity [CA] options other than ooo.

8 - Supply Voltage [SV]
1 - 115/1/60
2 - 208/1/60
3 - 230/1/60
4 - 208/3/60
5 - 230/3/60
6 - 460/3/60
7 - 575/3/60
Z - Other

9 - Motor Type [MT]
1 - Open Drip Proof
2 - Totally Enclosed
3 - Premium Efficiency, Open Drip Proof
4 - Premium Efficiency, Totally Enclosed

10 - Blower Motor Sizes [MS]
B - 1/3 HP w /Contactor
C - 1/2 HP w/Contactor
D - 3/4 HP w/Contactor
F - 1 HP w/Contactor
G - 1-1/2 HP w/Contactor
H - 2 HP w/Contactor
Q - 3 HP w/Contactor
K - 1/3 HP
L - 1/2 HP
M - 3/4 HP
N - 1 HP
P - 1/2 HP w/Magnetic Starter
R - 3/4 HP w/Magnetic Starter
S - 1 HP w/Magnetic Starter
T - 1-1/2 HP w/Magnetic Starter
U - 2 HP w/Magnetic Starter
W - 3 HP w/Magnetic Starter
Y - 1/3 HP w/Magnetic Starter

11 - Accessories [AS]

All Field Installed Accessories are to be entered as a separate line item using the catalog number which utilizes "11AS" as a prefix. i.e: F1 becomes 11AS-F1.

FACTORY INSTALLED
B1 - 1 inch Washable Filters
B6 - 1 inch Throwaway Filters

K4 - Fan Time Delay

P4 - Terminal Block Wiring

Y5 - Cabinet Insulation
Y6 - Transition Insulation

FIELD INSTALLED (AS-____)
F1 - 1-Stage T675A Ductstat
F2 - 2-Stage T678A Ductstat

G1 - 1-Stage Mercury Free Thermostat (Round)
G2 - 1-Stage Mercury Free Thermostat w/Guard Kit
G3 - 1-Stage Mercury Free Thermostat/Fan Switch
G5 - 2-Stage Mercury Free Thermostat w/Fan Switch
G6 - Locking Thermostat Cover
G9 - 1-Stage Mercury Free Heating Only Thermostat

Motor Data – Amps

	1-(115/1/60)				2 - (208/1/60)				3 - (230/1/60)				4 - (208/3/60)			
	1 ODP	2 TE	3 PEODP	4 PETE	1 ODP	2 TE	3 PEODP	4 PETE	1 ODP	2 TE	3 PEODP	4 PETE	1 ODP	2 TE	3 PEODP	4 PETE
1/3 HP	6.1	6.0	4.4	3.2	3.4				3.1	3.0	1.6	1.6	1.5	1.6		
1/2 HP	7.2	8.6	4.6	4.6	3.7		2.8		3.8	4.3	2.3	2.3	2.3	2.0	1.8	1.7
3/4 HP	11.6	11.0	6.5	6.3	5.2	5.4	3.4		5.0	5.5	3.3	3.2	3.0	3.2	2.5	
1 HP	13.0	13.4	8.6	8.5	6.6	6.8			6.5	6.7	4.3	4.3	3.4	3.7	3.1	3.1
1-1/2 HP	18.2	18.0	12.5	12.6	9.1	8.4			9.1	8.0	6.3	6.3	5.1	5.0	4.5	4.5
2 HP	21.0			17.6	11.3				10.5			8.8	6.2		5.8	6.0
3 HP	33.5	28.0			17.4	14.6			16.8	14.0		11.8	9.2		8.5	9.0

	5 - (230/3/60)				6 - (460/3/60)				7 - (575/3/60)			
	1 ODP	2 TE	3 PEODP	4 PETE	1 ODP	2 TE	3 PEODP	4 PETE	1 ODP	2 TE	3 PEODP	4 PETE
1/3 HP	1.6	1.9			0.8	0.8						
1/2 HP	2.2	2.5	1.8	2.0	1.1	1.0	0.9	1.0	0.8	0.8		
3/4 HP	3.4	3.0	2.4	2.8	1.7	1.5	1.2	1.4	1.1	1.1		
1 HP	3.4	3.4	3.0	3.1	1.7	1.7	1.5	1.5	1.3	1.7	1.2	1.2
1-1/2 HP	5.2	4.6	4.4	4.4	2.6	2.3	2.2	2.2	1.7		1.8	1.8
2 HP	6.0		5.8	5.8	3.0		2.9	2.9			2.3	2.4
3 HP	8.6		8.4	8.4	4.3		4.2	4.2			3.4	3.2

CAB Series — Cabinet Blower Dimensional Data

MODEL NO. *	A inch (mm)	B inch (mm)	C inch (mm)	D inch (mm)	E inch (mm)	F inch (mm)	G inch (mm)	APPR. SHIP WT. FILTER DATA SIZE **	FILTER REQ'D.	LESS MOTOR LB (KG)
CAB-1/100	65-1/2	26	10	18	21-1/4	15-3/4	15-5/8	25 X 25 X 1	1	135
	(1664)	(660)	(254)	(457)	(540)	(400)	(397)			(61)
CAB-2/150	65-1/2	26	10	18	21-1/4	15-3/4	18-3/8	25 X 25 X 1	1	155
	(1664)	(660)	(254)	(457)	(540)	(400)	(467)			(70)
CAB-3/200	65-1/2	40-1/2	10	18	35-3/4	30-3/8	23-7/8	25 X 20 X 1	2	200
	(1664)	(1029)	(254)	(457)	(908)	(772)	(606)			(91)
CAB-3/250	65-1/2	40-1/2	10	18	35-3/4	30-3/8	29-3/8	25 X 20 X 1	2	200
	(1664)	(1029)	(254)	(457)	(908)	(772)	(746)			(91)
CAB-4/300	65-1/2	60-1/2	10	18	55-3/4	50-3/8	34-7/8	25 X 20 X 1	3	296
	(1664)	(1537)	(254)	(457)	(1416)	(1280)	(886)			(134)
CAB-4/350	69-1/2	60-1/2	14	22	55-3/4	50-3/8	40-3/8	25 X 20 X 1	3	296
	(1765)	(1537)	(356)	(559)	(1416)	(1280)	(1026)			(134)
CAB-4/400	69-1/2	60-1/2	14	22	55-3/4	50-3/8	45-7/8	25 X 20 X 1	3	296
	(1765)	(1537)	(356)	(559)	(1416)	(1280)	(1165)			(134)

* Compatible Duct Furnace Capacity (ex. CAB-1/100 indicates CAB-1 is compatible with QVED/QVES/QVSD duct furnace models in size 100 MBH). Never use a single cabinet blower to handle more than one duct furnace. CAB-4 has two blowers driven by one motor.

** Standard filters are 1 inch thick throw away type. Side panels removable for inspection, servicing and motor maintenance. Cabinet painted gray enamel.

Sterling reserves the right to change specifications without incurring obligations.

Cabinet blower units are not certified by ETL.

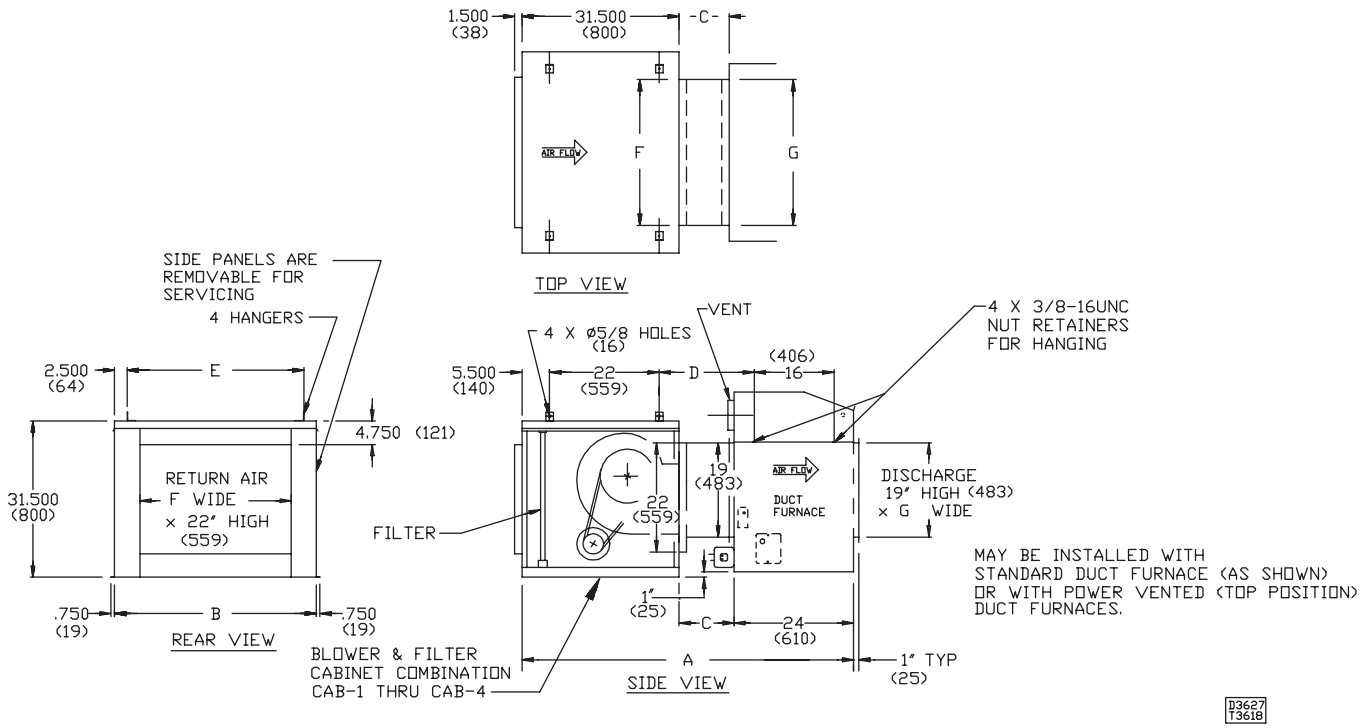

DIMENSIONS .XXX STANDARD UNITS
DIMENSIONS IN PARENTHESIS (XX) MILLIMETERS

CAB Series — Cabinet Blower Performance Data

Total Static Pressure * inch of WC (kPa)		0.2 (0.05)		0.3 (0.07)		0.4 (0.10)		0.5 (0.12)		0.6 (0.15)		0.7 (0.17)		0.8 (0.20)		0.9 (0.22)	
MODEL	CFM (cu. m/s)	RPM	HP (kW)	RPM	HP (kW)	RPM	HP (kW)	RPM	HP (kW)	RPM	HP (kW)	RPM	HP (kW)	RPM	HP (kW)	RPM	HP (kW)
	1,250 (0.590)	525	1/3 (0.25)	650	1/3 (0.25)	680	1/3 (0.25)	760	1/3 (0.25)	780	1/3 (0.25)	840	1/3 (0.25)	..	..	..	..
CAB 1 10" BLOWER	1,250 (0.590)	525	1/3 (0.25)	650	1/3 (0.25)	680	1/3 (0.25)	760	1/3 (0.25)	780	1/3 (0.25)	840	1/3 (0.25)	..	..	..	..
	1,500 (0.708)	600	1/3 (0.25)	680	1/3 (0.25)	715	1/3 (0.25)	790	1/3 (0.25)	810	1/2 (0.37)	860	1/2 (0.37)	895	1/2 (0.37)	970	1/2 (0.37)
	1,750 (0.826)	650	1/3 (0.25)	710	1/3 (0.25)	750	1/2 (0.37)	805	1/2 (0.37)	850	1/2 (0.37)	890	1/2 (0.37)	940	3/4 (0.56)	990	3/4 (0.56)
	2,000 (0.944)	700	1/2 (0.37)	760	1/2 (0.37)	800	1/2 (0.37)	850	1/2 (0.37)	890	1/2 (0.37)	925	3/4 (0.56)	980	3/4 (0.56)	1,010	3/4 (0.56)
	1,500 (0.708)	425	1/3 (0.25)	500	1/3 (0.25)	550	1/3 (0.25)	630	1/3 (0.25)	..	..	..	..	..	..	..	..
	1,750 (0.826)	450	1/3 (0.25)	515	1/3 (0.25)	560	1/3 (0.25)	635	1/2 (0.37)	680	1/2 (0.37)	725	1/2 (0.37)	..	..	..	..
CAB 2 12" BLOWER	2,000 (0.944)	475	1/3 (0.25)	530	1/3 (0.25)	590	1/2 (0.37)	640	1/2 (0.37)	690	1/2 (0.37)	740	1/2 (0.37)	785	1/2 (0.37)	810	3/4 (0.56)
	2,250 (1.062)	515	1/2 (0.37)	560	1/2 (0.37)	610	1/2 (0.37)	650	1/2 (0.37)	700	3/4 (0.56)	750	3/4 (0.56)	790	3/4 (0.56)	815	3/4 (0.56)
	2,500 (1.180)	540	1/2 (0.37)	590	1/2 (0.37)	625	1/2 (0.37)	670	1/2 (0.37)	710	3/4 (0.56)	760	3/4 (0.56)	795	3/4 (0.56)	820	3/4 (0.56)
	2,750 (1.298)	575	1/2 (0.37)	615	1/2 (0.37)	650	3/4 (0.56)	690	3/4 (0.56)	730	3/4 (0.56)	780	3/4 (0.56)	800	3/4 (0.56)	830	1 (0.75)
	1,750 (0.826)	450	1/3 (0.25)	510	1/3 (0.25)	560	1/3 (0.25)	630	1/3 (0.25)	675	1/2 (0.37)	720	1/2 (0.37)	..	..	..	..
	2,000 (0.944)	475	1/3 (0.25)	525	1/3 (0.25)	590	1/2 (0.37)	635	1/2 (0.37)	680	1/2 (0.37)	735	1/2 (0.37)	785	1/2 (0.37)	810	3/4 (0.56)
	2,250 (1.062)	500	1/2 (0.37)	550	1/2 (0.37)	600	1/2 (0.37)	645	1/2 (0.37)	685	1/2 (0.37)	740	3/4 (0.56)	785	3/4 (0.56)	810	3/4 (0.56)
	2,500 (1.180)	525	1/2 (0.37)	580	1/2 (0.37)	615	1/2 (0.37)	665	1/2 (0.37)	700	3/4 (0.56)	750	3/4 (0.56)	790	3/4 (0.56)	815	3/4 (0.56)
	2,750 (1.298)	560	1/2 (0.37)	605	1/2 (0.37)	640	3/4 (0.56)	685	3/4 (0.56)	715	3/4 (0.56)	775	3/4 (0.56)	805	3/4 (0.56)	825	1 (0.75)
CAB 3 12" BLOWER	3,000 (1.416)	610	1/2 (0.37)	640	3/4 (0.56)	660	3/4 (0.56)	710	3/4 (0.56)	750	1 (0.75)	790	1 (0.75)	815	1 (0.75)	845	1 (0.75)
	2,250 (1.062)	500	1/2 (0.37)	550	1/2 (0.37)	590	1/2 (0.37)	645	1/2 (0.37)	675	1/2 (0.37)	735	1/2 (0.37)	780	3/4 (0.56)	805	3/4 (0.56)
	2,500 (1.180)	520	1/2 (0.37)	580	1/2 (0.37)	610	1/2 (0.37)	665	1/2 (0.37)	700	3/4 (0.56)	745	3/4 (0.56)	800	3/4 (0.56)	810	3/4 (0.56)
	2,750 (1.298)	550	1/2 (0.37)	605	1/2 (0.37)	640	3/4 (0.56)	680	3/4 (0.56)	710	3/4 (0.56)	770	3/4 (0.56)	810	3/4 (0.56)	820	3/4 (0.56)
	3,000 (1.416)	600	3/4 (0.56)	640	3/4 (0.56)	670	3/4 (0.56)	705	3/4 (0.56)	730	3/4 (0.56)	785	1 (0.75)	820	1 (0.75)	840	1 (0.75)
	3,250 (1.534)	630	3/4 (0.56)	675	3/4 (0.56)	700	1 (0.75)	735	1 (0.75)	750	1 (0.75)	790	1 (0.75)	830	1 (0.75)	860	1 (0.75)
	3,500 (1.652)	675	3/4 (0.56)	700	1 (0.75)	725	1 (0.75)	775	1 (0.75)	800	1 (0.75)	840	1-1/2 (1.12)	875	1-1/2 (1.12)	890	1-1/2 (1.12)
	2,750 (1.298)	400	3/4 (0.56)	450	3/4 (0.56)	510	3/4 (0.56)	..	..	..	..	..	..	..	..	..	..
	3,000 (1.416)	425	3/4 (0.56)	475	3/4 (0.56)	550	3/4 (0.56)	600	3/4 (0.56)	650	3/4 (0.56)	..	..	..	..	..	..
	3,500 (1.652)	430	3/4 (0.56)	480	3/4 (0.56)	560	3/4 (0.56)	610	3/4 (0.56)	660	3/4 (0.56)	700	1 (0.75)	730	1 (0.75)	..	..
	4,000 (1.888)	450	3/4 (0.56)	500	3/4 (0.56)	565	3/4 (0.56)	615	3/4 (0.56)	670	1 (0.75)	710	1 (0.75)	740	1 (0.75)	790	1 (0.75)
	4,500 (2.124)	475	3/4 (0.56)	525	3/4 (0.56)	575	3/4 (0.56)	620	1 (0.75)	680	1 (0.75)	715	1 (0.75)	750	1 (0.75)	800	1-1/2 (1.12)
	5,000 (2.360)	500	3/4 (0.56)	540	3/4 (0.56)	600	1 (0.75)	630	1 (0.75)	690	1 (0.75)	720	1-1/2 (1.12)	760	1-1/2 (1.12)	810	1-1/2 (1.12)
	5,500 (2.596)	530	1 (0.75)	575	1 (0.75)	615	1 (0.75)	650	1-1/2 (1.12)	700	1-1/2 (1.12)	700	1-1/2 (1.12)	730	1-1/2 (1.12)	820	1-1/2 (1.12)
CAB 4 (2) 12" BLOWERS	6,000 (2.832)	575	1-1/2 (1.12)	615	1-1/2 (1.12)	660	1-1/2 (1.12)	690	1-1/2 (1.12)	715	1-1/2 (1.12)	760	2 (1.49)	800	2 (1.49)	830	2 (1.49)
	6,500 (3.068)	610	1-1/2 (1.12)	660	2 (1.49)	710	2 (1.49)	750	2 (1.49)	800	2 (1.49)	840	2 (1.49)	890	3 (2.24)	930	3 (2.24)
	7,000 (3.304)	720	1-1/2 (1.12)	790	2 (1.49)	830	2 (1.49)	860	2 (1.49)	910	3 (2.24)	940	3 (2.24)	960	3 (2.24)	NA	
	7,500 (3.540)	800	2 (1.49)	860	2 (1.49)	900	3 (2.24)	930	3 (2.24)	960	3 (2.24)	NA		NA		NA	
	8,000 (3.776)	860	2 (1.49)	930	3 (2.24)	960	3 (2.24)	NA		NA		NA		NA		NA	

*External static pressure in inches of WC. Add the pressure drop of the duct furnace and the pressure drop of the ductwork to determine the total external static pressure.

Accessories [AC]

FACTORY INSTALLED

A8 - INPUT DERATE
Series QVED, QVES, QVSD
Factory Installed
Unit is derated up to 50% for specific applications.

K4 - FAN TIME DELAY
Series QVED, QVES, QVSD
Field Installed
Thermal bi metalic type time delay is standard on all units except duct furnaces. Provides a 60 second delay on and 45 second delay off for blower operation.

K5 - AIR FLOW PROVE SWITCH
Series TD, QVED, QVES, QVSD
Factory Installed
A Dwyer 1910-0 pressure switch with an operating range of 0.15 - 0.5 inches WC.

M6 - OSHA TYPE FAN GUARD
Series XF
Factory installed available on series XF only, standard on series GG. Required for installations that must conform to OSHA standards. Also known as fingerproof fan guards.

M8 - DISCHARGE DUCT FLANGE ASSEMBLY
Series XC
Factory Installed
(Specify — No Charge)
Used in lieu of louvers on blower units for incorporating field duct work.

P4 - TERMINAL BLOCK WIRING
Series XF, XC, TD, QVED, QVES, QVSD
Factory Installed
Provides specific terminal designation for field wiring.

P6 - SUMMER/WINTER SWITCH
Series XF, XC, TD, QVED, QVES, QVSD
Factory Installed
Allows operation of fan or blower for ventilating purposes during hot summer months (manually operated).

S1 - 409 STAINLESS STEEL BURNERS
Series QVED, QVES, QVSD
Factory Installed
409 stainless steel burners in lieu of the standard aluminized steel burners.

S3 - STAINLESS STEEL FLUE COLLECTOR
Series XF, XC, GG
Factory Installed
409 Stainless steel flue collector in lieu of standard aluminized steel collector.

S5 - STAINLESS STEEL BURNERS
Series XF, XC, TD
Factory Installed
304L Stainless steel in-shot burners in lieu of the standard aluminized steel in-shot burners.

FIELD INSTALLED

A7 - PRESSURE REGULATOR 1/2-35 PSI
All Series & Sizes
Field Installed
Required where main line pressure exceeds 14 inches WC (1/2 psig). Choose regulator based on three incoming pressure ranges: 1/2-10 PSI, 10-20 PSI, 20-35 PSI. One regulator per unit required, shipped separately.

E9 - CONDENSATE NEUTRALIZER (INLINE)
Series HU, XH
Field Installed
Allows for flue condensate to be neutralized prior to piping to drain. Designed to be installed in line with condensate piping.

EW - CONDENSATE NEUTRALIZER (WALL MOUNTED)
Series HU, XH
Field Installed
Allows for flue condensate to be neutralized prior to piping to drain. Designed to be wall mounted.

F1 - ONE STAGE DUCTSTAT
Series XC, TD, QVED, QVES, QVSD
Field Installed
Single pole, double throw. 55-175°F setpoint range.
[2" W x 5-5/8" H x 2-7/16" D]

F2 - TWO STAGE DUCTSTAT
Series XC, TD, QVED, QVES, QVSD
Field Installed
Single pole, double throw. 55-175°F setpoint range.
[2" W x 5-5/8" H x 2-7/16" D]

G1 - ONE STAGE (MERCURY-FREE THERMOSTAT (ROUND)
All Series and Sizes
Field Installed
Single stage heating thermostat with subbase. Includes fan switching relay. Standard round styling suitable for any decor. 40-90°F range.

G2 - ONE STAGE (MERCURY-FREE) THERMOSTAT WITH GUARD
All Series and Sizes
Field Installed
Same features as "G1" except a tamper proof guard is included.

G3 - ONE STAGE (MERCURY-FREE) THERMOSTAT WITH FAN SWITCH
All Series and Sizes
Field Installed
Single stage heating thermostat with fan switch. Manufactured exclusively for Sterling with a "Sterling" logo face plate. 50-90°F range.
[2-7/8" W x 4-3/4" H x 1-1/2" D]

G5 - TWO STAGE (MERCURY-FREE) THERMOSTAT WITH FAN SWITCH
All Series and Sizes
Field Installed
Two stage heating and two stage cooling with system and fan switching and built in 10°F heating/cooling differential. Includes fan relay. Heating 40-90°F range, Cooling 50-99°F.
[5-13/16" W x 3-9/16" H x 1-1/2" D]

G6 - LOCKING THERMOSTAT COVER
All Series and Sizes
Field Installed
Universal locking thermostat cover for use with all thermostats listed.

G9 - ONE STAGE (MERCURY-FREE) HEATING ONLY THERMOSTAT
All Series and Sizes
Field Installed
Single stage heating only thermostat with subbase. 24 volt operation. 50-90°F range.
[2-7/8" W x 4-3/4" H x 1-1/2" D]

GW -TH8321WF (MERCURY-FREE) WI-FI PROGRAMMABLE COMMERCIAL TOUCHSCREEN THERMOSTAT
Series HU, XH, GG, XF, XC, TD
Field Installed
Provides 7 day programmability for up to 2 stages of heating and 2 stages of cooling. Includes Wi-Fi connectivity for remote control via computer, smart phone, or tablet. Heating range 40-90°F, cooling range 50-99°F.
[4-15/16" W x 4-5/8" H x 1-1/8" D]

H5 - LOW AMBIENT CONTROL
Series XF, XC, TD, QVED, QVES, QVSD
Field Installed
Disengages duct furnace(s) from firing in times of mild ambient temperatures.

H9 - STRATIFICATION SENSOR
HU Series
Field Installed
Allows for the unit to detect when there is excess heat (air stratification) at the ceiling. During this mode, the unit will turn off the mechanical heat but the supply fan will continue to run, resulting in a lower fuel cost while still providing heat to the space.

K8 - CONDENSATE PUMP
Series HU, XH
Field Installed
For installations where gravity will not cause the condensate to flow to the drain, a condensate pump can be used to force the condensate to the drain.

K9 - CONDENSATE PUMP SHELF
Series HU, XH
Field Installed
The condensate pump shelf is designed to connect directly to the bottom of the unit heater to provide a shelf for the installation of the condensate pump.

Accessories [AC]

M2 - 1, 2, 3 - VENT CAP
Series XF, XC, TD, QVED, QVES, QVSD
Field Installed
4 (QVED, QVES, QVSD only), 5 or 6 inch vent cap for use with series XF, XC, QVED, QVES, QVSD. Must indicate unit size when ordered.

M3-1 - ADAPTOR
Series QVED, QVES, QVSD
Field Installed
4 to 5 inch flue vent adaptor for use with 100 through 175 MBH power vented units. Power vented unit capacities 300, 350 and 400 require 5 to 6 inch flue vent adaptor which is supplied with the unit as standard equipment.

M4 - VERTICAL CONCENTRIC FLUE KIT
Series QVSD
Field Installed
Allows for one 8 inch vent/combustion air vertical penetration through a structure. Kit includes collection box, 5 inch flue gas vent cap and 8 inch combustion air inlet cap.

M5- HORIZONTAL CONCENTRIC FLUE KIT
Series QVSD
Field Installed
Allows for one 8 inch vent/combustion air horizontal penetration through a structure. Kit includes collection box, 5 inch flue gas vent cap and 8 inch combustion air inlet cap.

M7- 2 to 4 POINT SUSPENSION KIT
Series XF
Field Installed
Kit converts 2 point unit heater suspension to 4 point.

P2 - ADJUSTABLE HIGH LIMIT SWITCH
Series QVED, QVES, QVSD
Field Installed
Adjustable switch used in conjunction with the standard header mounted high limit switch.

P3 - ADJUSTABLE FAN SWITCH
Series QVED, QVES, QVSD
Field Installed
Adjustable switch used to cycle a separate blower.

P5 - 24 VOLT RELAY
All Series and Sizes
Field Installed
Specify purpose. 24 volt SPST relay.

Q1 - Y-SPLITTER NOZZLE
Series XF, XC
Field Installed
Dual discharge nozzle allows the discharge air to be supplied in two directions. Horizontal and vertical louvers are included.

Q7 - HORIZONTAL AND VERTICAL LOUVERS
Series QVED, QVES, QVSD
Field Installed
For four way deflection on duct.

S4 - 409 STAINLESS STEEL DRAIN PAN
Series TD, QVED, QVES
Field Installed
Condensate drain pan typically used when cooling coils are installed upstream of duct.

VC - 4 VENT CAP
Series GG
Field Installed
4 inch vent cap for use with series GG.

X2 - 30° NOZZLE
Series GG, XF, XC
Field Installed
Directs the discharge air at a 30° angle. Air can be directed up to 60° by adjusting the horizontal louvers. Louvers are supplied with the unit heater and must be reinstalled in the nozzle discharge. Must indicate unit size when ordered.

X3 - 60° NOZZLE
Series GG, XF, XC
Field Installed
Directs the discharge air at a 60° angle. Air can be directed up to 90° by adjusting the horizontal louvers. Louvers are supplied with the unit heater and must be reinstalled in the nozzle discharge. Must indicate unit size when ordered.

X4 - 90° NOZZLE
Series GG, XF, XC
Field Installed
Directs the discharge air at a 90° angle. Louvers are supplied with the unit heater and must be reinstalled in the nozzle discharge. Must indicate unit size when ordered.

X5 - VERTICAL LOUVER KIT
Series XF, XC
Field Installed
Vertical Louvers to provide 4 way air deflection. Must indicate unit size when ordered.

X5 - HORIZONTAL AND VERTICAL LOUVERS
Series TD
Field Installed
For four way deflection on duct.

X7 - 4, 5 COMBUSTION AIR INLET KIT
Series GG
Field Installed
Allows for one 6 or 8 inch vent/combustion air opening through a structure. One kit permits for either horizontal or vertical applications. *Kit required for converting a series GG to separated combustion.*

X7 - H5, H6 HORIZONTAL COMBUSTION AIR INLET KIT
Series XF, XC
Field Installed
Allows for one 8 or 10 inch horizontal vent/combustion air opening through a structure. Must indicate unit size when ordered.

X7 - V5, V6 VERTICAL COMBUSTION AIR INLET KIT
Series XF, XC
Field Installed
Allows for one 8 or 10 inch vertical vent/combustion air opening through a structure. Must indicate unit size when ordered.

X8 - H5, H6 HORIZONTAL COMBUSTION AIR INLET KIT
Series TD
Field Installed
Allows for one 8 or 10 inch horizontal vent/combustion air opening through a structure. *Kit required for converting series TD to separated combustion with single wall penetration.* Must indicate unit size when ordered.

X8 - V5, V6 VERTICAL COMBUSTION AIR INLET KIT
Series TD
Field Installed
Allows for one 8 or 10 inch vertical vent/combustion air opening through a structure. *Kit required for converting series TD to separated combustion with single roof penetration.* Must indicate unit size when ordered.

X9 - DBL - 5, 6 AIR INLET KIT
Series TD
Field Installed
Kit required for converting series TD to separated combustion. Kit includes (1) M2 Vent Cap. Must indicate unit size when ordered.

Y2 - 2" PVC CONCENTRIC VENT KIT
HU Series, 50-150 MBH
XH Series, 50-100 MBH
Field Installed
Allows for one 4 inch vent/combustion air opening through a structure. One kit permits for either horizontal or vertical applications.

Y3 - 3" PVC CONCENTRIC VENT KIT
HU Series, 200 MBH
XH Series, 150 MBH
Field Installed
Allows for one 5 inch vent/combustion air opening through a structure. One kit permits for either horizontal or vertical applications.

Y4 - 4" PVC CONCENTRIC VENT KIT
HU Series, 300-400 MBH
XH Series, 200-400 MBH
Field Installed
Allows for one 6 inch vent/combustion air opening through a structure. One kit permits for either horizontal or vertical applications.

Heat Throw Data

NOTES: 1. All throw data shown below is for tubular unit heaters only – excludes Series HU, XH, TD, QVED, QVES, QVSD and CAB.
2. All throw data figures are approximations. Allowances should be made for optimum performance, altitude, etc.
3. "NR" - Units not recommended at these mounting heights.
4. 30, 60 and 90 degree nozzles are shipped unassembled, Y-splitter is factory assembled.
5. Only one nozzle at a time can be installed on a unit heater.



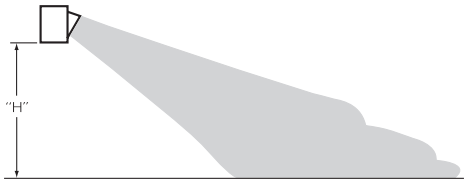

STANDARD UNIT HEATER APPLICATIONS

Distance From Floor to Bottom of Unit "H" Feet (Meters)	Approximate Distance of Heat Throw - Feet (Meters)			
	UNIT SIZE BTU/HR (kW)			
	30,000 (8.8)	45,000 (13.2)	60,000 (17.6)	75,000 (22.0)
8 (2.4)	33 (10.1)	33 (10.1)	33 (10.1)	40 (12.2)
10 (3.0)	28 (8.5)	28 (8.5)	28 (8.5)	35 (10.7)
12 (3.7)	NR	NR	NR	NR
15 (4.6)	NR	NR	NR	NR
20 (6.1)	NR	NR	NR	NR
	UNIT SIZE BTU/HR (kW)			
	90,000 (26.4)	100,000 (29.3)	105,000 (30.8)	120,000 (34.2)
8 (2.4)	40 (12.2)	60 (18.3)	60 (18.3)	65 (19.8)
10 (3.0)	35 (10.7)	54 (16.5)	54 (16.5)	56 (17.1)
12 (3.7)	NR	44 (13.4)	44 (13.4)	46 (14.0)
15 (4.6)	NR	NR	NR	NR
20 (6.1)	NR	NR	NR	NR
	UNIT SIZE BTU/HR (kW)			
	125,000 (36.6)	150,000 (43.9)	175,000 (51.2)	200,000 (58.6)
8 (2.4)	65 (19.8)	70 (21.3)	75 (22.9)	80 (24.4)
10 (3.0)	56 (17.1)	60 (18.3)	64 (19.5)	68 (20.7)
12 (3.7)	46 (14.0)	49 (14.9)	57 (17.4)	61 (18.6)
15 (4.6)	NR	45 (13.7)	49 (14.9)	52 (15.8)
20 (6.1)	NR	NR	NR	46 (14.0)
	UNIT SIZE BTU/HR (kW)			
	250,000 (73.2)	300,000 (87.8)	350,000 (102.5)	400,000 (117.1)
8 (2.4)	90 (27.4)	105 (32.0)	110 (33.5)	120 (36.6)
10 (3.0)	78 (23.8)	90 (27.4)	95 (29.0)	100 (30.5)
12 (3.7)	68 (20.7)	80 (24.4)	84 (25.6)	90 (27.4)
15 (4.6)	60 (18.3)	70 (21.3)	74 (22.6)	80 (24.4)
20 (6.1)	54 (16.5)	63 (19.2)	66 (20.1)	70 (21.3)

30° NOZZLE

Distance From Floor to Bottom of Unit "H" Feet (Meters)	Approximate Distance of Heat Throw - Feet (Meters)			
	UNIT SIZE BTU/HR (kW)			
	30,000 (8.8)	45,000 (13.2)	60,000 (17.6)	75,000 (22.0)
8 (2.4)	Data Not Available			
10 (3.0)	Data Not Available			
12 (3.7)	Data Not Available			
15 (4.6)	Data Not Available			
20 (6.1)	Data Not Available			
	UNIT SIZE BTU/HR (kW)			
	90,000 (26.4)	100,000 (29.3)	105,000 (30.8)	120,000 (34.2)
8 (2.4)	Data Not Available	65 (19.8)	Data Not Available	Data Not Available
10 (3.0)	Data Not Available	57 (17.4)	Data Not Available	Data Not Available
12 (3.7)	Data Not Available	50 (15.2)	Data Not Available	Data Not Available
15 (4.6)	Data Not Available	NR	Data Not Available	Data Not Available
20 (6.1)	Data Not Available	NR	Data Not Available	Data Not Available
	UNIT SIZE BTU/HR (kW)			
	125,000 (36.6)	150,000 (43.9)	175,000 (51.2)	200,000 (58.6)
8 (2.4)	70 (21.3)	75 (22.9)	80 (24.4)	85 (25.9)
10 (3.0)	60 (18.3)	64 (19.5)	68 (20.7)	72 (21.9)
12 (3.7)	54 (16.5)	57 (17.4)	60 (18.3)	64 (19.5)
15 (4.6)	45 (13.7)	48 (14.6)	50 (15.2)	53 (16.2)
20 (6.1)	NR	NR	44 (13.4)	47 (14.3)
	UNIT SIZE BTU/HR (kW)			
	250,000 (73.2)	300,000 (87.8)	350,000 (102.5)	400,000 (117.1)
8 (2.4)	95 (29.0)	115 (35.1)	120 (36.6)	125 (38.1)
10 (3.0)	86 (26.2)	99 (30.2)	105 (32.0)	110 (33.5)
12 (3.7)	77 (23.5)	88 (26.8)	94 (28.7)	100 (30.5)
15 (4.6)	64 (19.5)	74 (22.6)	79 (24.1)	84 (25.6)
20 (6.1)	58 (17.7)	66 (20.1)	71 (21.6)	75 (22.9)

Heat Throw Data



60° NOZZLE

Distance From Floor to Bottom of Unit "H" Feet (Meters)	Approximate Distance of Heat Throw - Feet (Meters)			
	UNIT SIZE BTU/HR (kW)			
	30,000 (8.8)	45,000 (13.2)	60,000 (17.6)	75,000 (22.0)
8 (2.4)	Data Not Available			
10 (3.0)	Data Not Available			
12 (3.7)	Data Not Available			
15 (4.6)	Data Not Available			
20 (6.1)	Data Not Available			
	UNIT SIZE BTU/HR (kW)			
	90,000 (26.4)	100,000 (29.3)	105,000 (30.8)	120,000 (34.2)
8 (2.4)	Data Not Available	75 (22.9)	Data Not Available	Data Not Available
10 (3.0)	Data Not Available	65 (19.8)	Data Not Available	Data Not Available
12 (3.7)	Data Not Available	60 (18.3)	Data Not Available	Data Not Available
15 (4.6)	Data Not Available	50 (15.2)	Data Not Available	Data Not Available
20 (6.1)	Data Not Available	NR	Data Not Available	Data Not Available
	UNIT SIZE BTU/HR (kW)			
	125,000 (36.6)	150,000 (43.9)	175,000 (51.2)	200,000 (58.6)
8 (2.4)	80 (24.4)	85 (25.9)	90 (27.4)	95 (29.0)
10 (3.0)	70 (21.3)	75 (22.9)	79 (24.1)	83 (25.3)
12 (3.7)	64 (19.5)	68 (20.7)	72 (21.9)	76 (23.2)
15 (4.6)	54 (16.5)	56 (17.1)	61 (18.6)	65 (19.8)
20 (6.1)	49 (14.9)	52 (15.8)	55 (16.8)	59 (18.0)
	UNIT SIZE BTU/HR (kW)			
	250,000 (73.2)	300,000 (87.8)	350,000 (102.5)	400,000 (117.1)
8 (2.4)	110 (33.5)	125 (38.1)	130 (39.6)	138 (42.1)
10 (3.0)	95 (29.0)	109 (33.2)	115 (35.1)	120 (36.6)
12 (3.7)	84 (25.6)	100 (30.5)	103 (31.4)	108 (32.9)
15 (4.6)	71 (21.6)	85 (25.9)	88 (26.8)	94 (28.7)
20 (6.1)	65 (19.8)	77 (23.5)	81 (24.7)	85 (25.9)

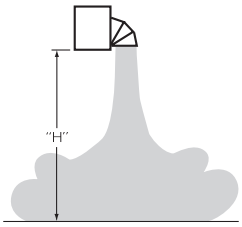

90° NOZZLE*

Distance From Floor to Bottom of Unit "H" Feet (Meters)	Approximate Distance of Heat Throw - Feet (Meters)		
	UNIT SIZE BTU/HR (kW)		
	100,000 (29.3)	125,000 (36.6)	150,000 (43.9)
10 (3.0)	NR	NR	NR
15 (4.6)	30 x 25 (9.1) x (7.6)	35 x 30 (10.7) x (9.1)	40 x 35 (12.2) x (10.7)
20 (6.1)	NR	NR	NR
25 (7.6)	NR	NR	NR
30 (9.1)	NR	NR	NR
	UNIT SIZE BTU/HR (kW)		
	175,000 (51.2)	200,000 (58.6)	250,000 (73.2)
10 (3.0)	NR	NR	NR
15 (4.6)	45 x 40 (13.7) x (12.2)	50 x 40 (15.2) x (12.2)	60 x 45 (18.3) x (13.7)
20 (6.1)	NR	40 x 35 (12.2) x (10.7)	56 x 40 (17.1) x (12.2)
25 (7.6)	NR	NR	50 x 35 (15.2) x (10.7)
30 (9.1)	NR	NR	NR
	UNIT SIZE BTU/HR (kW)		
	300,000 (87.8)	350,000 (102.5)	400,000 (117.1)
10 (3.0)	NR	NR	NR
15 (4.6)	70 x 45 (21.3) x (13.7)	80 x 50 (24.4) x (15.2)	100 x 50 (30.5) x (15.2)
20 (6.1)	65 x 40 (19.8) x (12.2)	70 x 45 (21.3) x (13.7)	80 x 45 (24.4) x (13.7)
25 (7.6)	60 x 35 (18.3) x (10.7)	65 x 40 (19.8) x (12.2)	75 x 40 (22.9) x (12.2)
30 (9.1)	55 x 35 (16.8) x (10.7)	60 x 35 (18.3) x (10.7)	65 x 40 (19.8) x (12.2)

*It is not recommended to mount a unit with a 90º nozzle at 10 feet or less.
Heat Throw data for GG Series units with a 90º nozzle installed is not currently available.

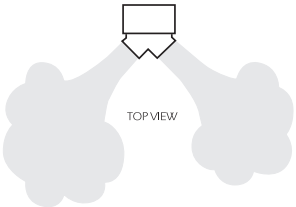

"Y" SPLITTER

Distance From Floor to Bottom of Unit "H" Feet (Meters)	UNIT SIZE BTU/Hr (kW)								
	100,000 (29.3)	125,000 (36.6)	150,000 (43.9)	175,000 (51.2)	200,000 (58.6)	250,000 (73.2)	300,000 (87.8)	350,000 (102.5)	400,000 (117.1)
	Approximate Distance of Heat Throw - Feet (Meters)								
8 (2.4)	47 (14.3)	51 (15.5)	60 (18.3)	65 (19.8)	70 (21.3)	80 (24.4)	95 (29.0)	100 (30.5)	103 (31.4)
10 (3.0)	41 (12.5)	44 (13.4)	52 (15.8)	56 (17.1)	61 (18.6)	69 (21.0)	82 (25.0)	87 (26.5)	92 (28.0)
12 (3.7)	37 (11.3)	40 (12.2)	47 (14.3)	51 (15.5)	55 (16.8)	63 (19.2)	75 (22.9)	79 (24.1)	82 (25.0)

Nozzle Dimensions*

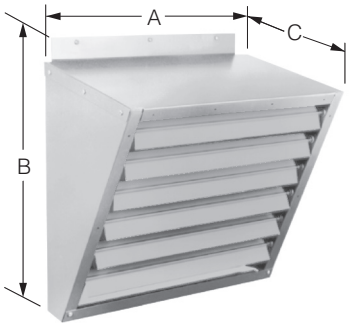

30° NOZZLE

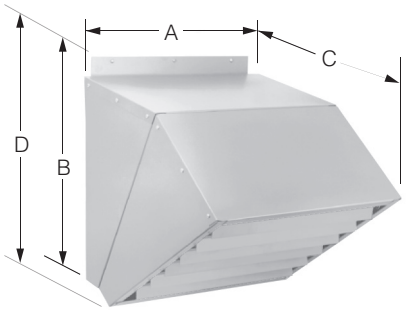

60° NOZZLE

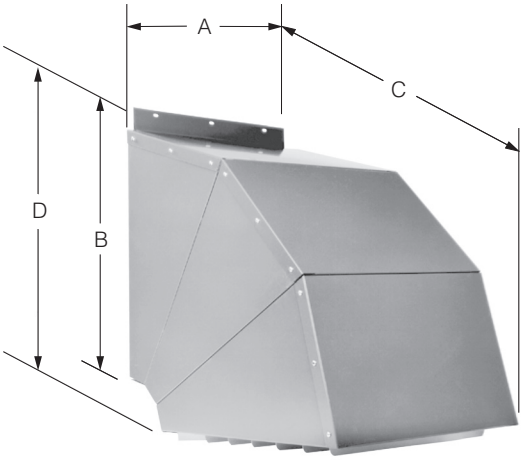

90° NOZZLE



Y-SPLITTER

*30, 60 and 90 degree nozzles are field assembled; Y-splitter is factory assembled.

NOZZLE DIMENSIONAL DATA CHART

DIMENSION	NOZZLE TYPE	30, 45	60, 75	90, 105, 120	100, 125, 150	175, 200, 250	300, 350, 400
WIDTH A Inches (mm)	30°	19-5/8 (498)	19-5/8 (498)	19-5/8 (498)	20-3/4 (527)	32-3/4 (832)	50-3/4 (1289)
	60°	19-5/8 (498)	19-5/8 (498)	19-5/8 (498)	20-3/4 (527)	32-3/4 (832)	50-3/4 (1289)
	90°	19-5/8 (498)	19-5/8 (498)	19-5/8 (498)	20-3/4 (527)	32-3/4 (832)	50-3/4 (1289)
HEIGHT B Inches (mm)	30°	12-1/16 (306)	15-5/8 (397)	22-3/8 (568)	31-1/2 (800)	31-1/2 (800)	31-1/2 (800)
	60°	12-1/16 (306)	15-5/8 (397)	22-3/8 (568)	31-1/2 (800)	31-1/2 (800)	31-1/2 (800)
	90°	12-1/16 (306)	15-5/8 (397)	22-3/8 (568)	31-1/2 (800)	31-1/2 (800)	31-1/2 (800)
FURTHEST DEPTH C Inches (mm)	30°	13-1/8 (333)	13-1/8 (333)	13-1/8 (333)	15 (381)	15 (381)	15 (381)
	60°	22-3/16 (564)	22-3/16 (564)	22-3/16 (564)	25-1/2 (648)	25-1/2 (648)	25-1/2 (648)
	90°	25-9/16 (694)	25-9/16 (694)	25-9/16 (694)	28-1/4 (718)	28-1/4 (718)	28-1/4 (718)
HEIGHT WITH OVERHANG D Inches (mm)	30°			N/A			
	60°	13-5/16 (338)	16-7/8 (429)	23-5/8 (600)	30 (762)	30 (762)	30 (762)
	90°	15-1/4 (387)	18-13/16 (478)	25-9/16 (649)	34 (864)	34 (864)	34 (864)

XH Series
Typical Standard Specification

Furnish and install, where indicated or scheduled on plans, gas-fired unit heaters manufactured by Sterling HVAC. All heaters are to have a minimum thermal efficiency of 93%. The heat exchanger consists of stainless steel tubes with brass and aluminum fins. Burners are to be of the "in-shot" design. A direct spark ignition system with integrated control and redundant gas valve shall be utilized. Flame rectification shall be independent of the spark igniter allowing true indication of complete ignition of the burner. Most cabinetry and trim pieces shall be fabricated of 18-gauge zinc aluminum magnesium (ZAM) treated corrosion resistant steel.

All line voltage wiring shall be completely enclosed in flexible conduit. Heaters shall be equipped with a 120/24 volt controls transformer. Factory wiring shall permit the use of propeller fan for continuous air circulation when combined with manufacturer's (optional) 24-volt summer/winter single stage thermostat. The main control board and pressure switch shall be factory mounted in the main burner compartment located on the access side of the unit; the side panel is removed to create easy access to all control wiring. External LEDs shall be located on the access side of the unit for ease of troubleshooting.

Units will be equipped with a low voltage automatic reset high temperature control, wired to de-energize the main gas valve and maintain fan or blower operation until the high temperature control resets. Units will be equipped with 120/1/60 volt motors, which include internal automatic reset thermal overload protection. Unit fans will be hubbed with aluminum blades and have fan guard protection. Fans shall be equipped with OSHA fan guards as standard. Adjustable and individually removable horizontal louver blades shall be provided on all units for directing air flow.

Units to be vented horizontally or vertically via standard combustion one-pipe configuration or separated combustion two-pipe configuration. When necessary to vent separated combustion concentrically through one wall or roof penetration, an optional concentric vent kit shall be used.

Unit shall have integral condensate float switch to de-energize main control board in the event of condensate pipe blockage. Condensate trap shall be included with unit for field install.

All units and component assemblies shall be warranted for a period of one year from the date of shipment from the factory or 18 months from the date of manufacture, whichever occurs first. All burners, heat exchangers, and flue collectors shall carry a ten-year non-prorated limited warranty on materials and workmanship (subject to appropriate disclaimers).

HU Series
Typical Standard Specification

Furnish and install, where indicated or scheduled on plans, gas-fired unit heaters manufactured by Sterling HVAC. All heaters are to have a minimum thermal efficiency of 95%. The heat exchanger consists of stainless steel tubes with brass and aluminum fins. Burners shall be metal fiber mesh type constructed of stainless steel. A direct spark ignition system with integrated control and redundant gas valve shall be utilized. Flame rectification shall be independent of the spark igniter allowing true indication of complete ignition of the burner. Most cabinetry and trim pieces shall be fabricated of 20-gauge 430 brushed stainless steel.

All line voltage wiring shall be completely enclosed in flexible conduit. Heaters shall be equipped with a 120/24 volt controls transformer. Factory wiring shall permit the use of propeller fan for continuous air circulation when combined with manufacturer's (optional) 24-volt summer/winter single stage thermostat. The main control board and pressure switch shall be factory mounted in a control box located on the rear of the unit; this panel creates easy access to all control wiring. External LEDs shall be located on the bottom of the control box for ease of troubleshooting.

Units will be equipped with a low voltage automatic reset high temperature control, wired to de-energize the main gas valve and maintain fan or blower operation until the high temperature control resets. Units will be equipped with 120/1/60 volt motors, which include internal automatic reset thermal overload protection. Unit fans will be hubbed with aluminum blades and have fan guard protection. HU units with inputs equal or greater than 200,000 BTUs shall be equipped with dual motors and fan blades for optimum air distribution. Fans shall be equipped with OSHA fan guards as standard. Adjustable and individually removable horizontal louver blades shall be provided on all units for directing air flow.

Unit shall have integral condensate float switch to de-energize main control board in the event of condensate pipe blockage. Condensate trap shall be included with unit for field install.

All units and component assemblies shall be warranted for a period of one year from the date of shipment from the factory or 18 months from the date of manufacture, whichever occurs first. All burners, heat exchangers, and flue collectors shall carry a ten-year non-prorated limited warranty on materials and workmanship (subject to appropriate disclaimers).

GG Series
Typical Standard Specification

Furnish and install, where indicated or scheduled on plans, gas-fired unit heaters manufactured by Sterling HVAC. All heaters are to have a minimum thermal efficiency of 82%. The heat exchanger consists of aluminized steel tubes not lighter than 20-gauge. Burner system is to be of the "single-orifice burner" design. A direct spark ignition system with integrated control and redundant gas valve shall be utilized. Flame rectification shall be independent of the spark igniter, allowing true indication of complete ignition of the burner. Most cabinetry and trim pieces shall be fabricated of 20-gauge material, and finished with a baked gray enamel.

Units to be vented horizontally or vertically via standard combustion one-pipe configuration or separated combustion two-pipe configuration. When necessary to vent separated combustion concentrically through one wall or roof penetration, an optional combustion air inlet kit will be made available.

Heaters shall be equipped with a 120/24 volt transformer; factory wiring shall permit the use of propeller fan for continuous air circulation when combined with manufacturers (optional) 24 volt summer/winter single stage thermostat. The control transformer and pressure switch shall be factory mounted in a main control cabinet located on the side of the unit; the side panel is removed to create easy access and all wiring information will be indicated on the inside control cabinet.

Units will be equipped with a low voltage automatic reset high temperature control, wired to de-energize the main gas valve and maintain fan operation until the high temperature control resets. Units will be equipped with 120/1/60 volt motors which include internal automatic reset thermal overload protection. Fans will be hubbed with aluminum blades and have OSHA-approved fan guard protection. Adjustable and individually removable horizontal louver blades shall be provided for directing air flow.

All units and component assemblies shall be warranted for a period of one year from the date of shipment from the factory or 18 months from the date of manufacture, whichever occurs first. All burners, heat exchangers, and flue collectors shall carry a ten year non-prorated limited warranty on materials and workmanship (subject to appropriate disclaimers).

XF/XC Series
Typical Standard Specification

Furnish and install, where indicated or scheduled on plans, gas-fired unit heaters manufactured by Sterling HVAC. All heaters are to have a minimum thermal efficiency of 83%. The heat exchanger consists of aluminized steel tubes not lighter than 20-gauge. Burners are to be of the "in-shot" design. A direct spark ignition system with integrated control and redundant gas valve shall be utilized. Flame rectification shall be independent of the spark igniter allowing true indication of complete ignition of the burner. Most cabinetry and trim pieces shall be fabricated of 20-gauge material and finished with a baked gray enamel.

All line voltage wiring shall be completely enclosed in flexible conduit. Heaters shall be equipped with a 120/24 volt controls transformer. Factory wiring shall permit the use of propeller fan on XF units and blower on XC units, for continuous air circulation when combined with manufacturer's (optional) 24-volt summer/winter single stage thermostat. The control transformer and pressure switch shall be factory mounted in a main control panel located on the side of the unit; this panel creates easy access and all wiring information will be indicated on the inside control panel door.

Units will be equipped with a low voltage automatic reset high temperature control, wired to de-energize the main gas valve and maintain fan or blower operation until the high temperature control resets. Units will be equipped with 120/1/60 volt motors, which include internal automatic reset thermal overload protection. XF unit fans will be hubbed with aluminum blades and have fan guard protection. XF units with inputs greater than 250,000's BTU's shall be equipped with dual motors and fan blades for optimum air distribution. XC units shall have centrifugal blowers with an OSHA type belt guard. XC units with inputs greater than 250,000 BTU's shall be equipped with dual blowers on a single shaft for optimum air distribution. Adjustable and individually removable horizontal louver blades shall be provided on all units for directing air flow.

Units to be vented horizontally or vertically via standard combustion one-pipe configuration or separated combustion two-pipe configuration. When necessary to vent separated combustion concentrically through one wall or roof penetration, an optional combustion air inlet kit will be made available.

All units and component assemblies shall be warranted for a period of one year from the date of shipment from the factory or 18 months from the date of manufacture, whichever occurs first. All burners, heat exchangers, and flue collectors shall carry a ten year non-prorated limited warranty on materials and workmanship (subject to appropriate disclaimers).

TD Series
Typical Standard Specification

Furnish and install where shown on plans, Gas-Fired Tubular Duct Furnaces as made by Sterling HVAC.

All units and components are to be warranted (subject to appropriate disclaimers) from defects in material and workmanship for a period of one year from date of shipment from the factory. Heat Exchanger, draft hood assembly, and burners will be free from defects in material or workmanship for a period of ten (10) years from the date of manufacture.

Sterling HVAC Model TD Tubular Duct Furnaces are completely factory assembled, piped, wired and test fired. All models are ETL certified as having 82% thermal efficiency and for operation on either natural or LP (propane) gas. All models conform to the latest ANSI Standards for safe and efficient performance.

All sizes have exceptionally low pressure drop, making it possible to handle large volumes of air without using an axillary by-pass. Sterling HVAC duct furnaces are tested to operate against 2.0 inches water column pressure.

Casings shall be double wall construction consisting of a 20-gauge exterior panel, 1/2 inch Microlite insulation and 16-gauge interior liner. Exterior and interior panels shall be finished in baked enamel. Burners shall be aluminized steel and shall be of in-shot design. Heat exchangers and flue collector shall be aluminized steel or 409 stainless steel. Tubes shall not be lighter than 20-gauge.

All models are equipped with direct spark ignition, 115 volt power venter, vent system pressure switch, high limit switch, fan time delay and 24 volt control transformer. Units are provided with a four-point suspension system.

All models must be vented utilizing our standard two-pipe method or our optional certified Air Inlet Kit or Combustion Air Inlet kit for concentric venting.

QVED/QVES/QVSD Series
Typical Standard Specification

Furnish and install where shown on plans, gas-fired duct furnaces as made by Sterling HVAC. Burners shall be pressed aluminized steel or 409 stainless steel, and shall have stainless steel port protectors. Heat exchangers shall be aluminized steel, 409 stainless steel or 321 stainless steel. Tubes shall not be lighter than 20-gauge. Headers shall not be lighter than 18-gauge. Furnaces to be of neat appearance and good workmanship. All units and components are to be warranted (subject to appropriate disclaimers) from defects in material and workmanship for a period of one year from date of shipment from the factory.

All sizes have exceptionally low pressure drop, making it possible to handle large volumes of air without using an axillary by-pass. Sterling duct furnaces are tested to operate against 2.0 inches water column pressure.

All models are equipped with electronic spark ignition (100% safety shutoff on LP models), 115 volt power venter, vent system pressure switch, high limit switch, fan time delay and 24 volt control transformer.

Indoor Duct Furnaces are completely factory assembled, piped, wired and test fired. All models conform to the latest ANSI Standards for safe and efficient performance. Units are provided with a four-point suspension system and are available for operation on either natural or LP gas.

Casings are die-formed 20-gauge bonderized steel, finished in baked enamel. Burners are accessible through a removable, bottom panel (QVED & QVSD only). Burners are accessible through a removable, side panel (QVES only).

All models are equipped with a 24 volt control system, which is powered by a factory installed 115/24 volt transformer, Electronic Spark Ignition and Integral Power Venting with a sealed flue collector.

CAB Series
Typical Standard Specification

Cabinet blowers shall be as made by Sterling HVAC consisting of a 20-gauge aluminized steel cabinet, with removable side panels, centrifugal fan, motor and filters. Motor and drive shall be furnished by the factory and shipped fully mounted so that field mounting is not required. Motor pulley shall be adjustable as to pitch diameter. When a cabinet blower-duct furnace combination is required, the manufacturer shall furnish the standard cataloged duct transition piece. Furnaces shall be of neat appearance and good workmanship. All units and components are to be warranted (subject to appropriate disclaimers) from defects in materials and workmanship for a period of one year from the date of shipment from the factory.

High Efficiency Unit Heaters, Tubular Unit Heaters and TD Duct Furnaces

LIMITED WARRANTY

1. Sterling ("the Manufacturer") warrants to the original owner at original installation site that the above models of Sterling Gas–Fired Heaters ("the Product") will be free from defects in material or workmanship for one (1) year from the date of shipment from the factory, or one and one–half (1-1/2) years from the date of manufacture, whichever occurs first. Sterling further warrants that the complete heat exchanger, flue collector, and burners will be free from defects in material or workmanship for a period of ten (10) years from the date of manufacture. If upon examination by the Manufacturer the Product is shown to have a defect in material or workmanship during the warranty period, the Manufacturer will repair or replace, at its option, that part of the Product which is shown to be defective.
2. This limited warranty does not apply:
   (a) if the Product has been subjected to misuse or neglect, has been accidentally or intentionally damaged, has not been installed, maintained or operated in accordance with the furnished written instructions, or has been altered or modified in any way by any unauthorized person.
   (b) to any expenses, including labor or material, incurred during removal or reinstallation of the Product.
   (c) to any damage due to corrosion by chemicals, including halogenated hydrocarbons, precipitated in the air.
   (d) to any workmanship of the installer of the Product.
3. This limited warranty is conditional upon:
   (a) advising the installing contractor, who will in turn notify the distributor or manufacturer.
   (b) shipment to the Manufacturer of that part of the Product thought to be defective. Goods can only be returned with prior written approval of the Manufacturer. All returns must be freight prepaid.
   (c) determination in the reasonable opinion of the Manufacturer that there exists a defect in material or workmanship.
4. Repair or replacement of any part under this Limited Warranty shall not extend the duration of the warranty with respect to such repaired or replaced part beyond the stated warranty period.
5. **THIS LIMITED WARRANTY IS IN LIEU OF ALL OTHER WARRANTIES, EITHER EXPRESS OR IMPLIED, AND ALL SUCH OTHER WARRANTIES, INCLUDING WITHOUT LIMITATION IMPLIED WARRANTIES OF MERCHANTABILITY OR FITNESS FOR A PARTICULAR PURPOSE, ARE HEREBY DISCLAIMED AND EXCLUDED FROM THIS LIMITED WARRANTY. IN NO EVENT SHALL THE MANUFACTURER BE LIABLE IN ANY WAY FOR ANY CONSEQUENTIAL, SPECIAL, OR INCIDENTAL DAMAGES OF ANY NATURE WHATSOEVER, OR FOR ANY AMOUNTS IN EXCESS OF THE SELLING PRICE OF THE PRODUCT OR ANY PARTS THEREOF FOUND TO BE DEFECTIVE. THIS LIMITED WARRANTY GIVES THE ORIGINAL OWNER OF THE PRODUCT SPECIFIC LEGAL RIGHTS. YOU MAY ALSO HAVE OTHER RIGHTS WHICH MAY VARY BY EACH JURISDICTION.**

Duct Furnaces, Cabinet Blowers

1-YEAR LIMITED WARRANTY UNIT TYPE QVES, QVED, QVSD, CAB 1-4

Duct Furnaces, Separated Combustion Unit Heaters and Cabinet Blowers are warranted by Sterling to be free from defects in materials and workmanship for a period of one (1) year from date of shipment from Sterling's Plant.

Sterling will repair or replace, at its option, any components which, upon inspection, it finds to be defective, provided that the unit has been operated within its listed capacity, has been installed in accordance with the furnished instructions, has not been misused or subject to negligence and has received reasonable and necessary maintenance.

This warranty does not cover loss due to corrosion by chemicals precipitated in the air such as halogenated hydrocarbons.

Sterling will in no event be liable for incidental or consequential damages of any kind whatsoever.

Written permission is required prior to the return of defective components. All returns must be sent with all transportation charges prepaid to the plant designated in the written permission.

STERLING®
HVAC PRODUCTS
260 NORTH ELM ST. WESTFIELD, MA 01085
(413) 564-5540
www.sterlinghvac.com
A MESTEK COMPANY